3pi+ 32U4 OLED Control Board

Pinout and peripherals

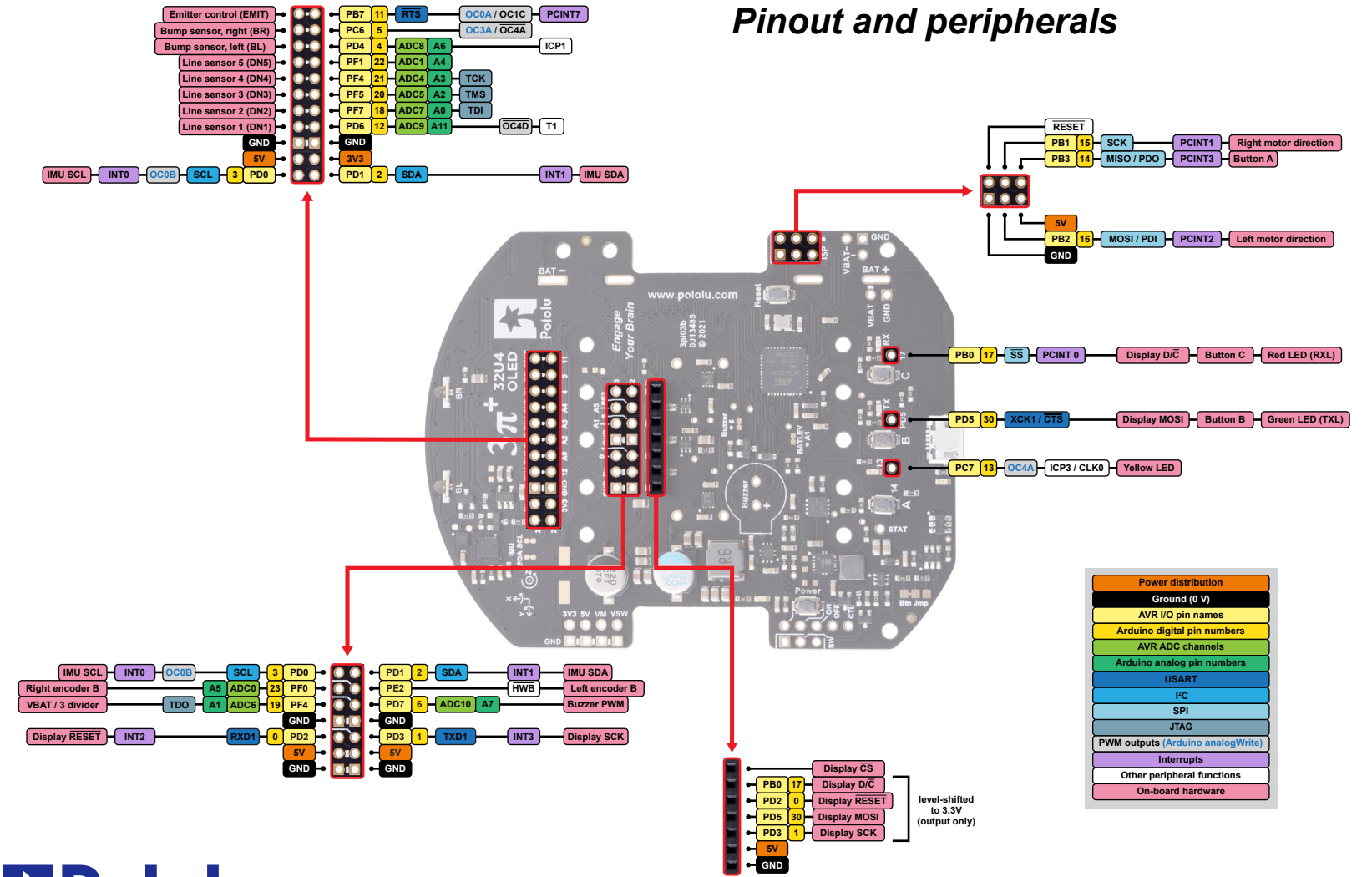

3pi+ 32U4 OLED Control Board
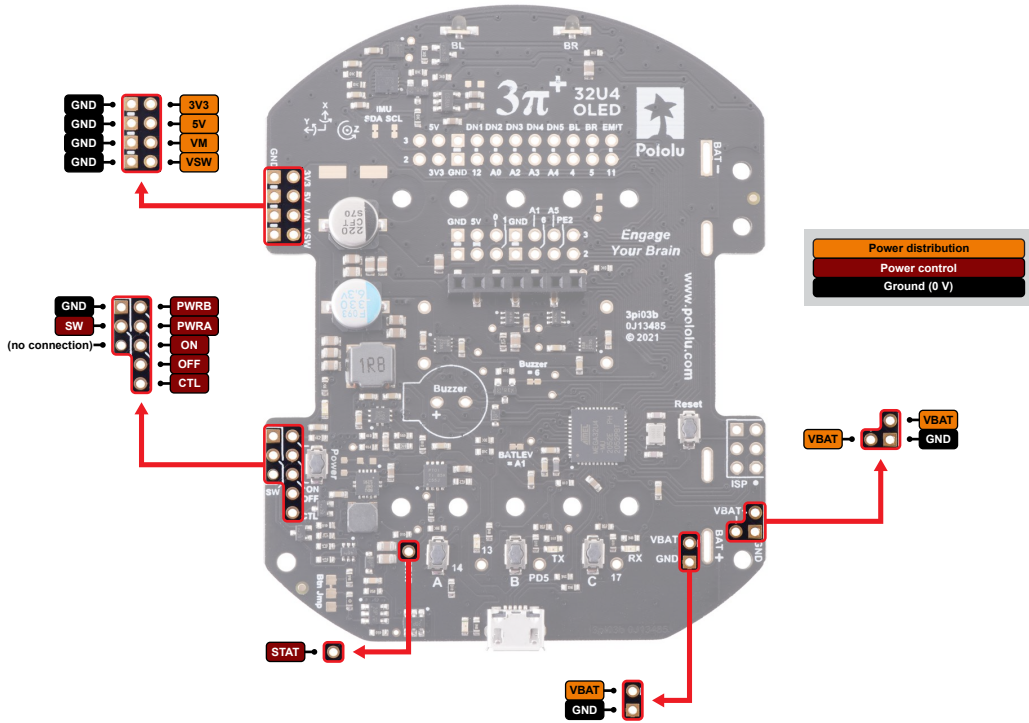
Power distribution and control