Arducam-HM0360 Camera Module

TOP VIEW

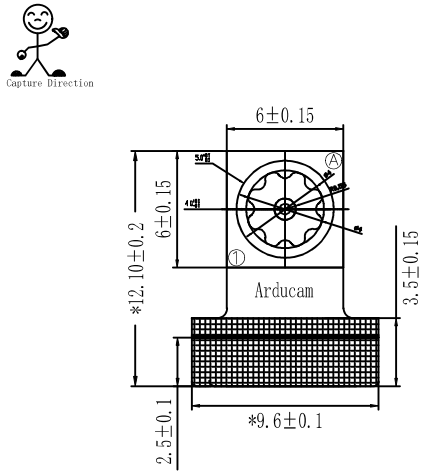

SIDE VIEW

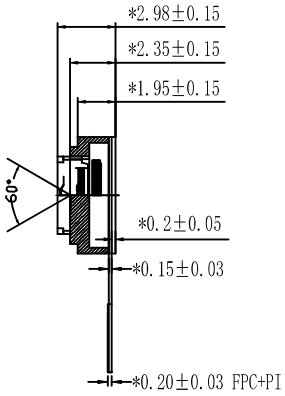

BOTTOM VIEW

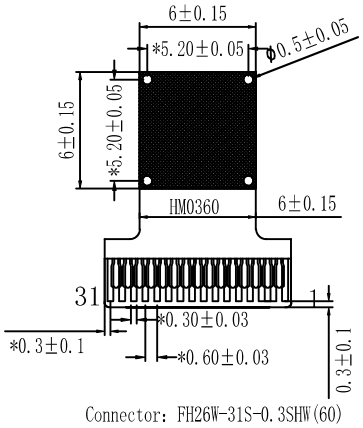

CONNECTOR
31PIN DESCRIPTION

Pin.NO.	SYMBOL
1	TRIG
2	INT
3	CXT-SEL
4	D0
5	D1
6	D2
7	D3
8	D4
9	D5
10	D6
11	D7
12	SCL
13	SDA
14	DGND
15	MCLK
16	HREF
17	PCLK
18	AGND
19	AVDD2.8V
20	DOVDD1.8V
21	VSYNC
22	DVDD1.5V
23	CLKSEL
24	FSIN
25	METER
26	STROBE
27	I2C-SEL1
28	I2C-SEL0
29	XSLEEP
30	RTC
31	XSHUTDOWN

Module specification

EFL	1.47	Array Size	320*320		
F.NO	2.8±5%	AVDD	2.8V		
View Angle	60°	DOVDD	1.8V		
Distortion	< 1.0%	DVDD	1.5V		
Lens	TR03A-H660B	AFVDD	NC		
Chip Type	HM0360-MWA	Lens Size	1/11inch		

ArduCam®

Part.NO: Arducam-HM0360 | Title: Arducam-HM0360

SHT.NO	SIZE	UNIT	PAGE	SCALE	REV	DATE	DRAWN	CHECKED
1/1	A4	mm	1	1:1	V1	20210222	HJS	HJS