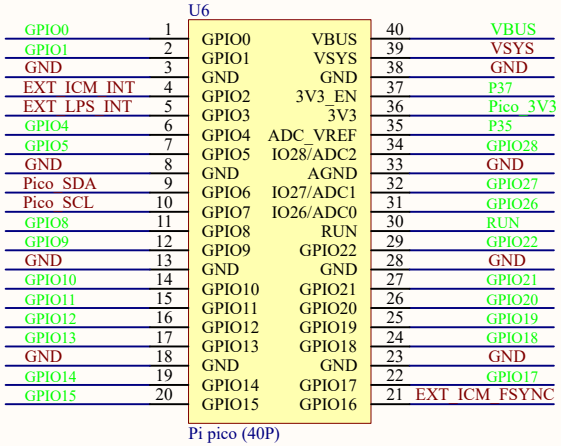

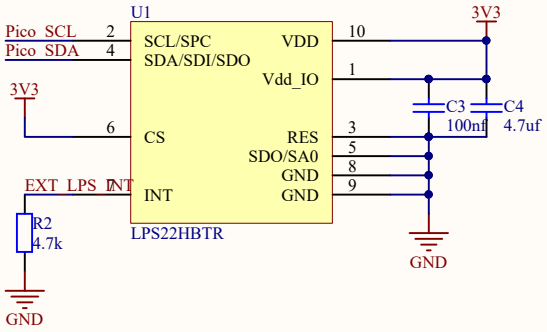

LPS22HBTR

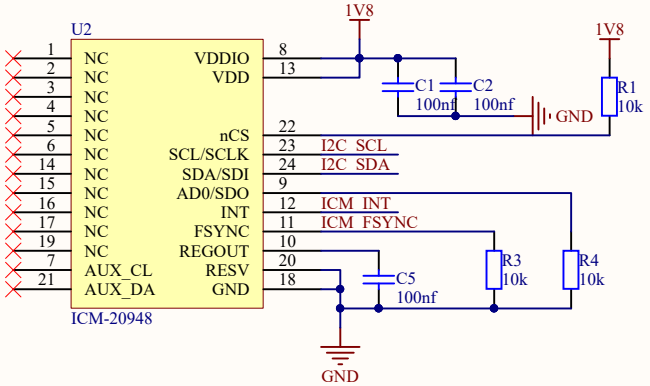

ICM-20948

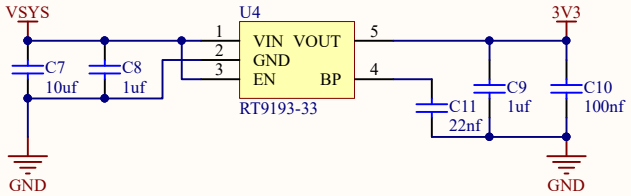

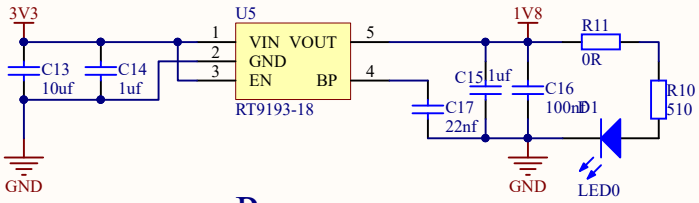

Power

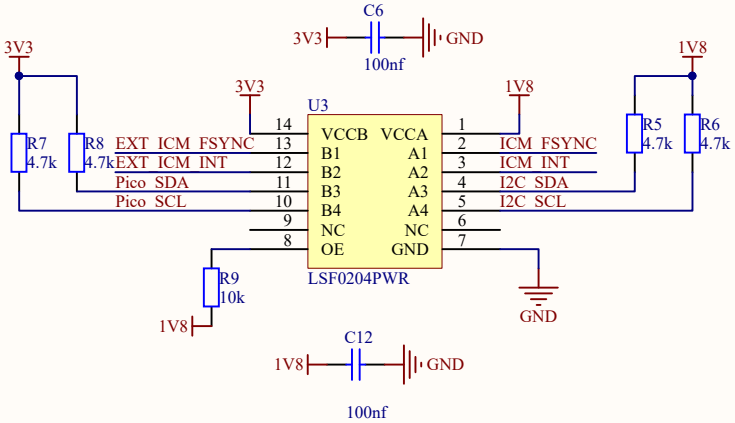

LSF0204PWR

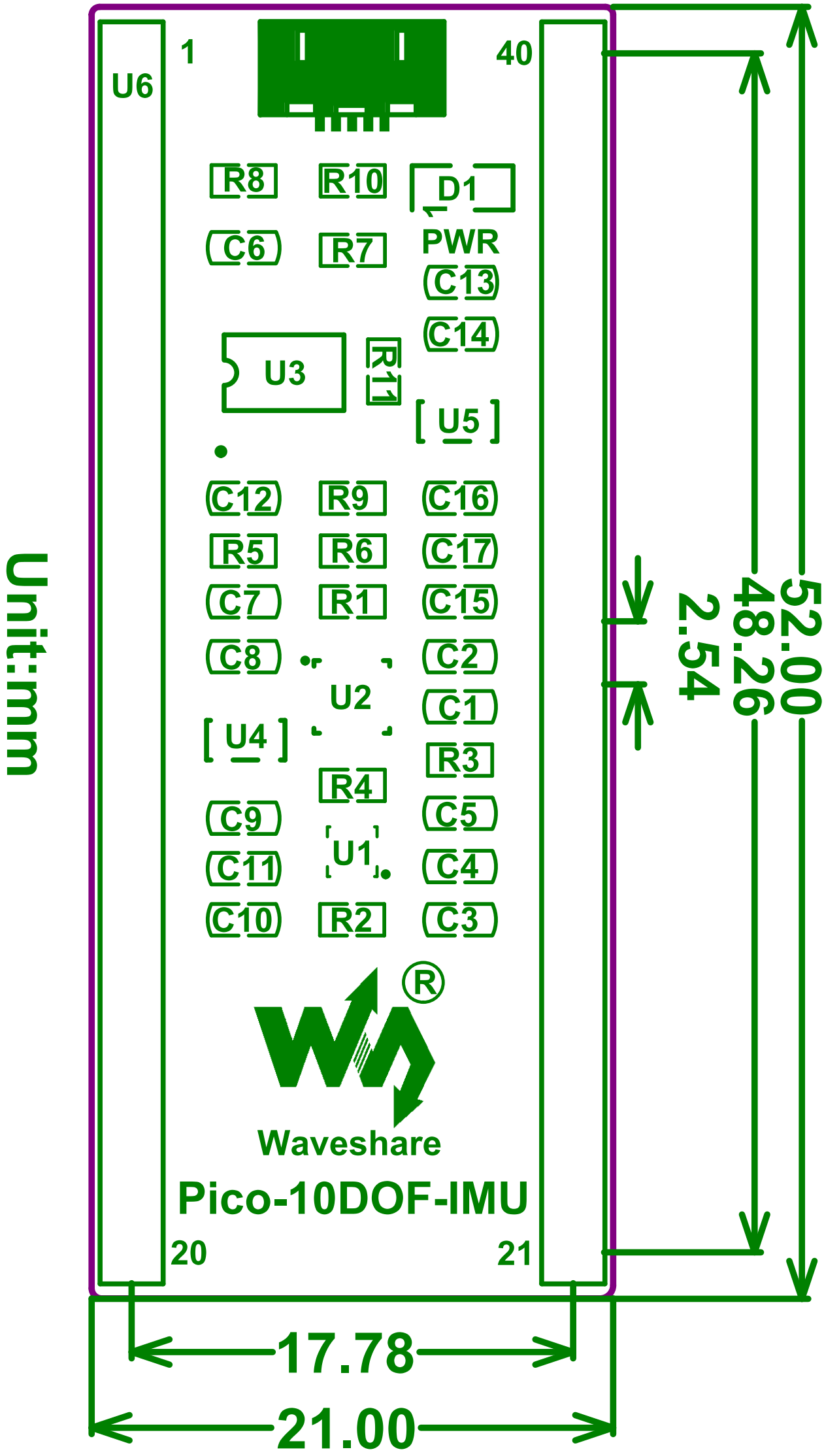
U6
1
40
R8
R10
D1
PWR
C6
R7
C13
C14
U3
R11
U5
C12
R9
C16
R5
R6
C17
C7
R1
C15
C8
C2
U2
C1
U4
R3
R4
C9
C5
U1
C11
C4
C10
R2
C3
Waveshare
Pico-10DOF-IMU
20
21
Unit:mm
52.00
48.26
2.54
17.78
21.00