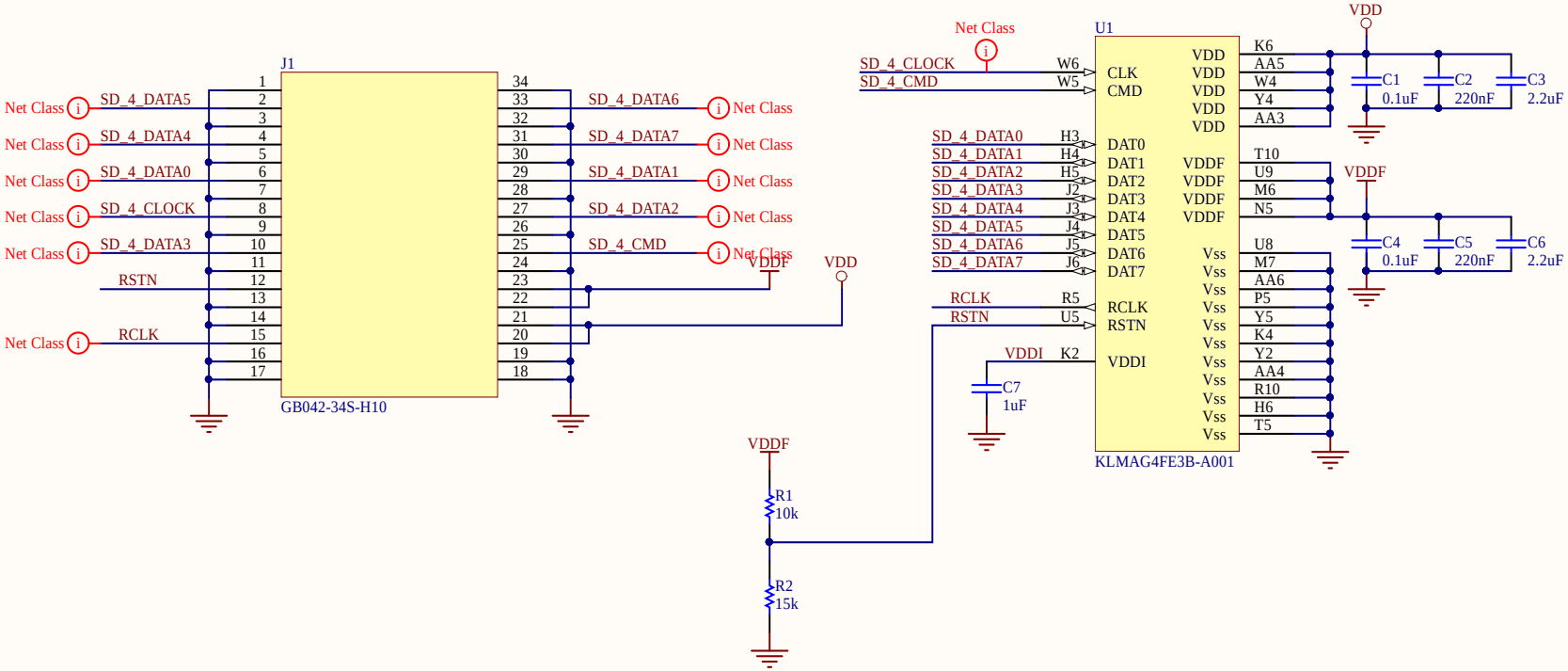

Title	*eMMC Board*		*R&D PART* *704 Anyang K-center 1591-9* *Burim Dongan Gu* *Gyeonggido* *South Korea*
Size: A4	Number: 1	Revision: 0.4	
Date: 2017-11-16	Time: 오후 6:03:24	Sheet 1 of 1	
File: D:\hw\hkl\pegasus\emmc-bd\EMMC.SchDoc			