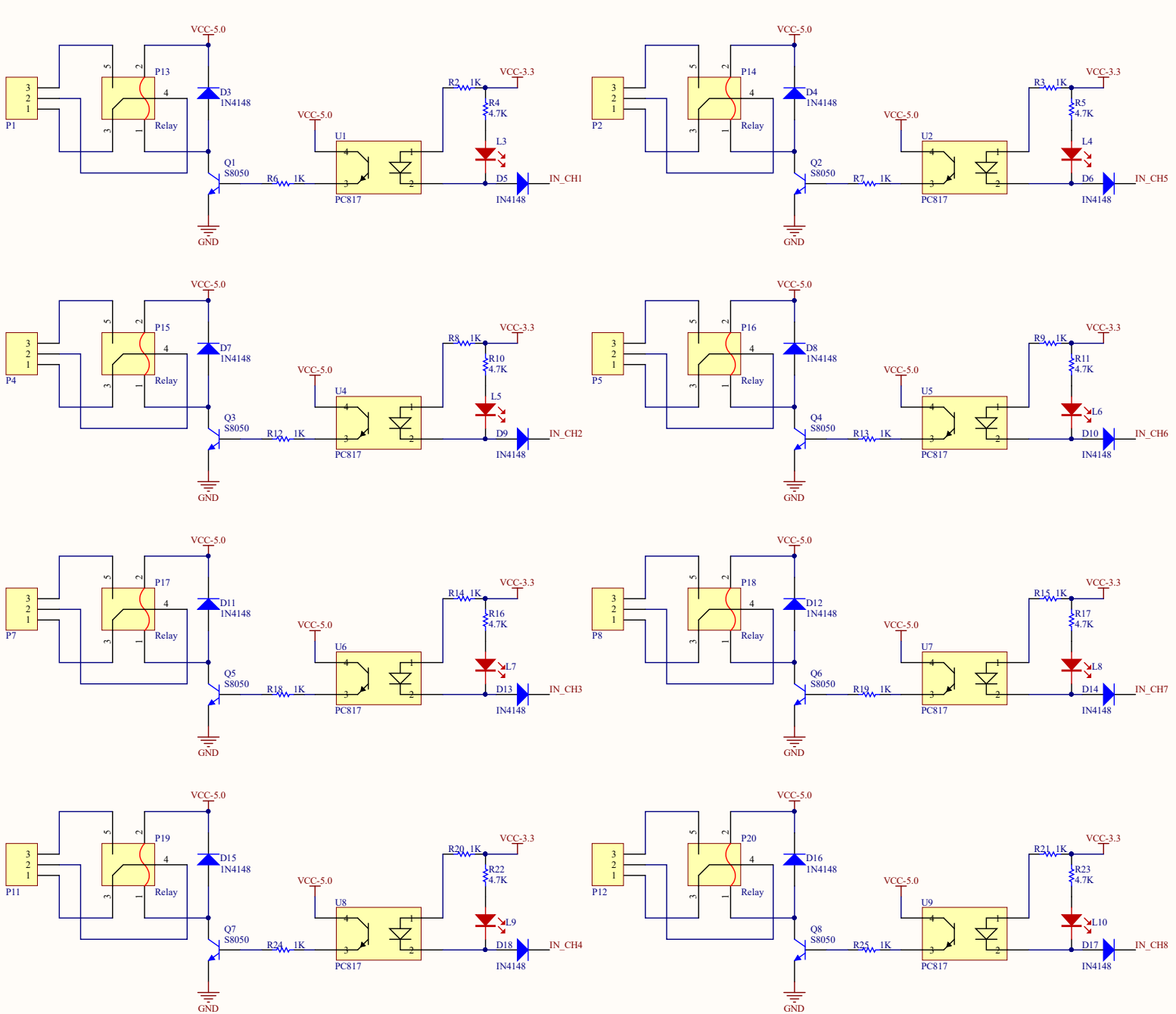

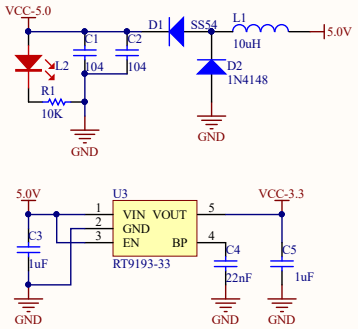

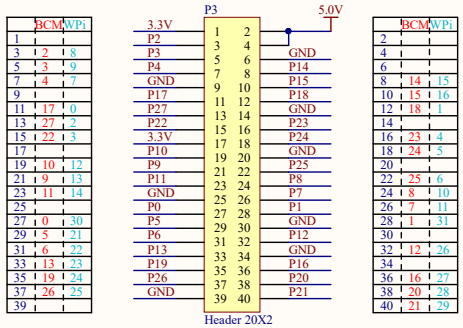

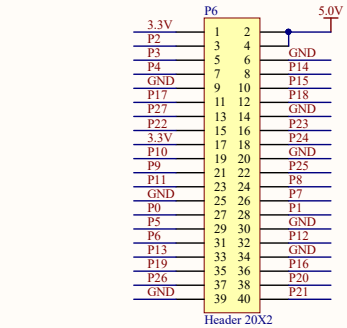

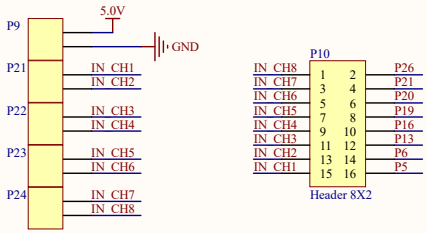

RPi Relay Board(B)

Waveshare