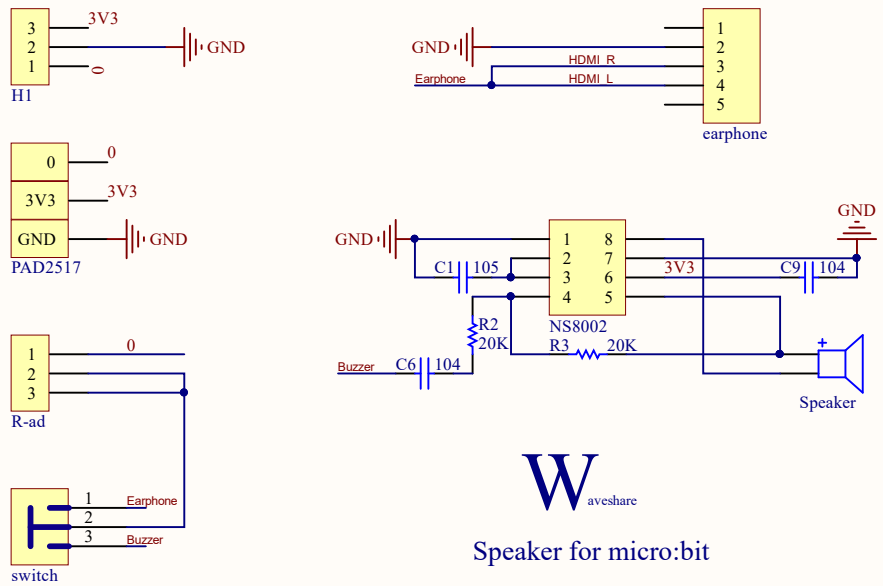

Waveshare

Speaker for micro:bit