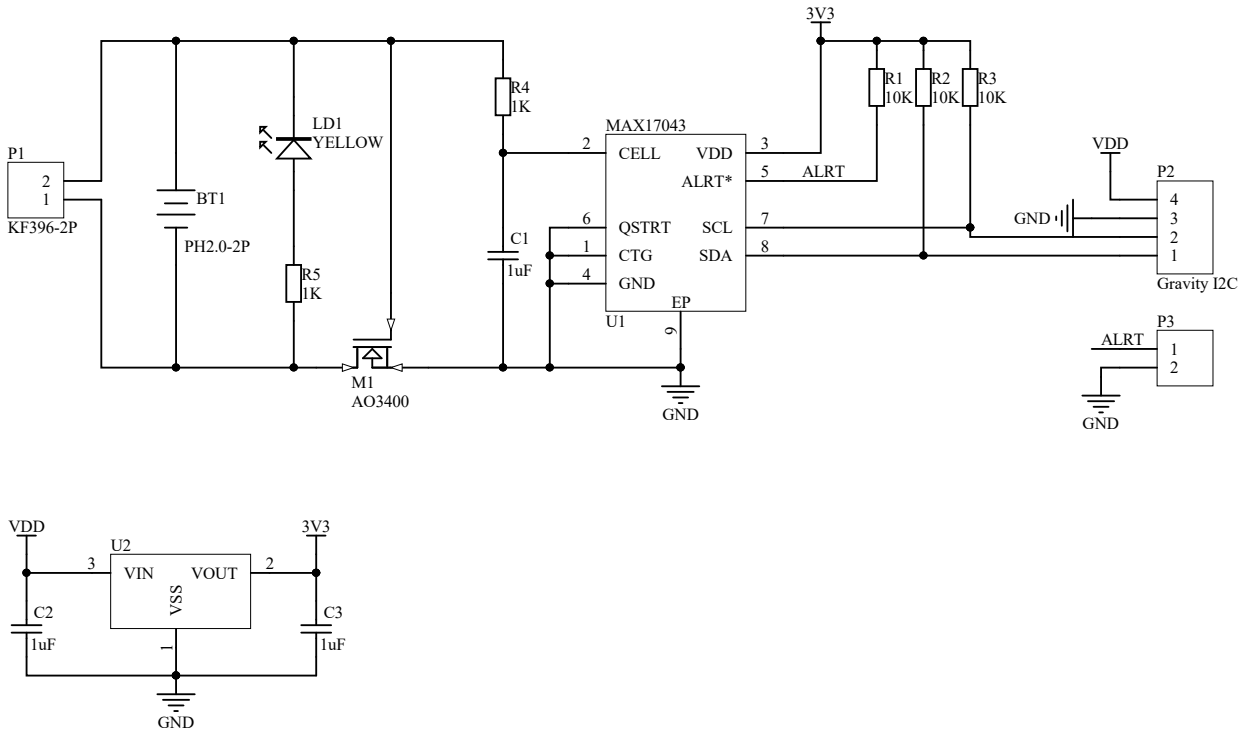

Title: *Gravity: 3.7V Li Battery Fuel Gauge*			SKU: DFR0563
Drawn: Henry-SH	Revision: V1.0		Size: A4
Page: 1 of 1	Date: 2018/4/3		Time: 15:25:35