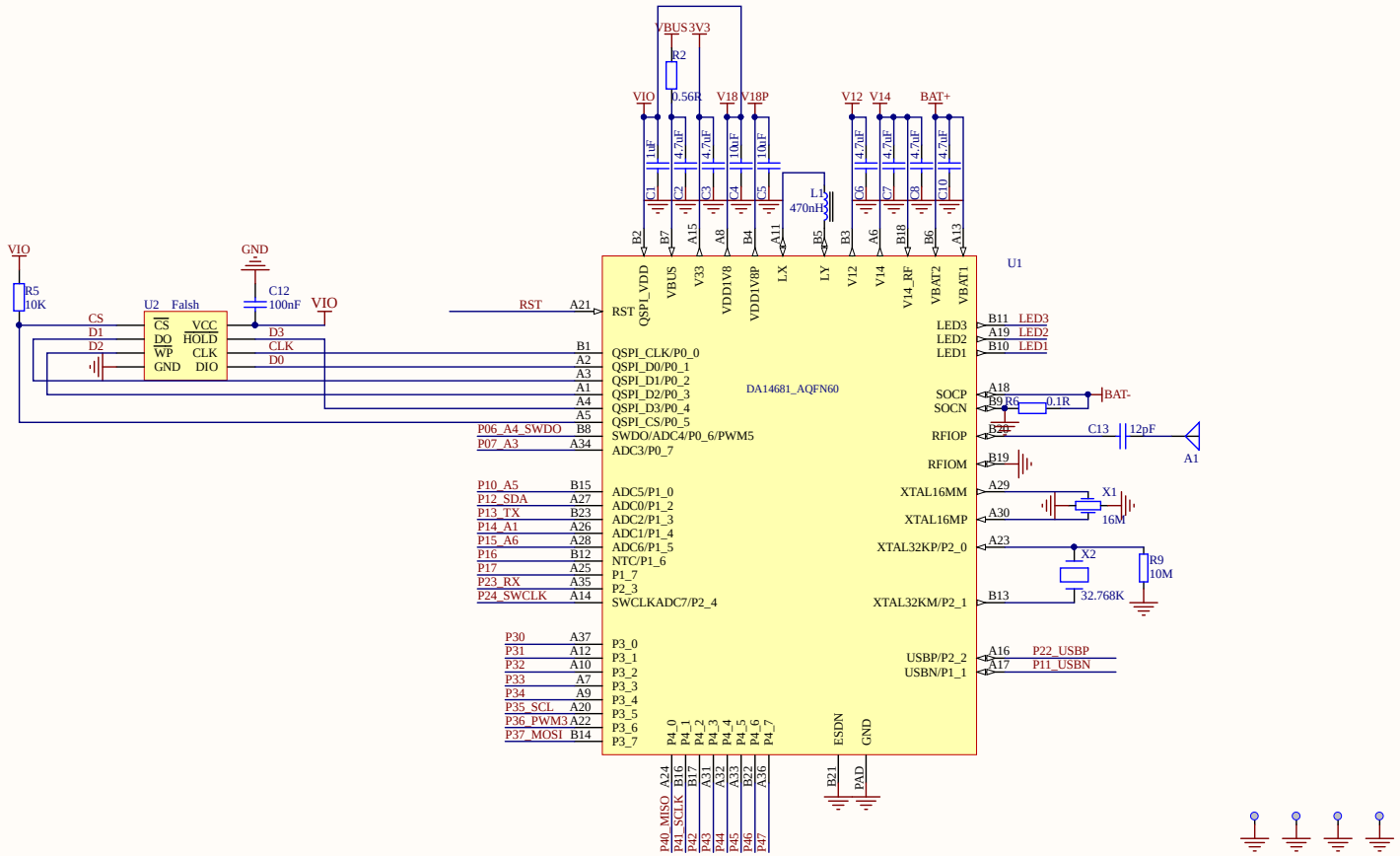

Title: DFRobot BLE4.1 Module			SKU: TEL0120
Drawn: LF-CD	Revision: V1.0		Size: A3
Page: 1 of 1	Date: 2017/6/14		Time: 9:22:09