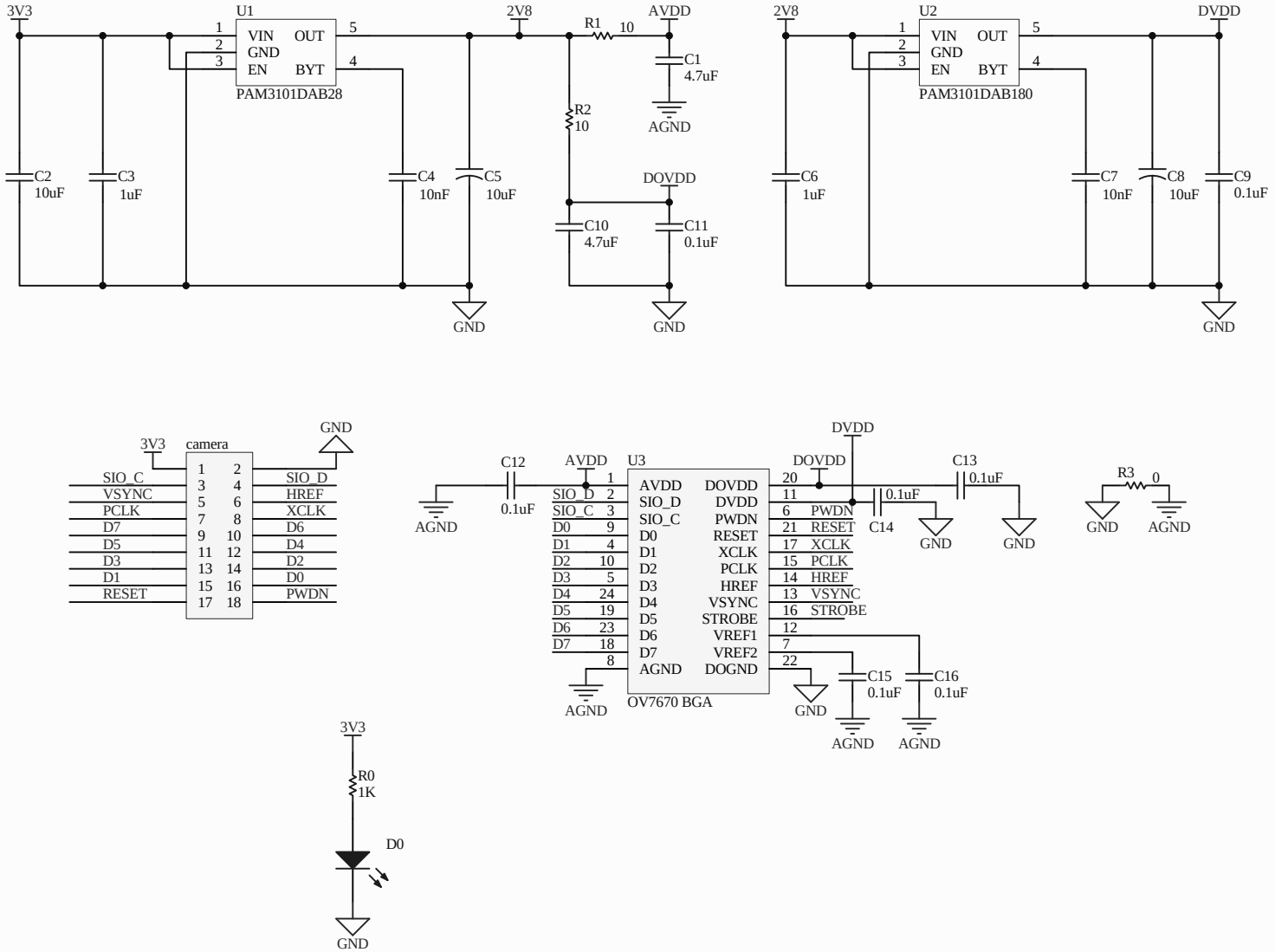
3V3
U1
VIN
OUT
GND
EN
BYT
PAM3101DAB28
2V8
R1
10
AVDD
C1
4.7uF
AGND
R2
10
DOVDD
C2
10uF
C3
1uF
C4
10nF
C5
10uF
C10
4.7uF
C11
0.1uF
GND
U2
PAM3101DAB180
DVDD
C6
1uF
C7
10nF
C8
10uF
C9
0.1uF
camera
SIO_C
VSYNC
PCLK
D7
D5
D3
D1
RESET
SIO_D
HREF
XCLK
D6
D4
D2
D0
PWDN
C12
0.1uF
U3
OV7670 BGA
C13
0.1uF
C14
0.1uF
R3
0
C15
0.1uF
C16
0.1uF
R0
1K
D0