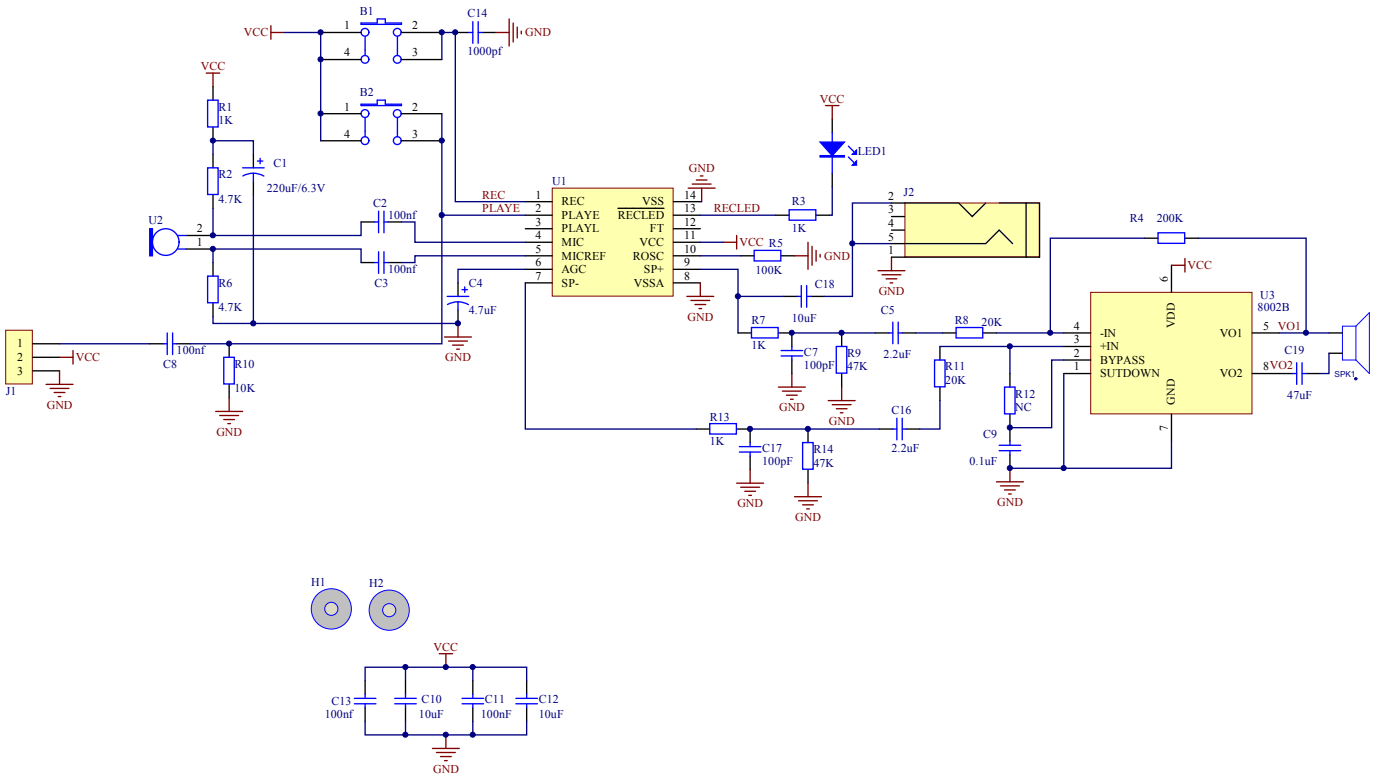

Title: *Voice Recorder-ISD1820*			SKU: SEN0197
Drawn: XXXXX-CD	Revision: V1.0		Size: A3
Page: X of Y	Date: 2016/6/8		Time: 14:01:52