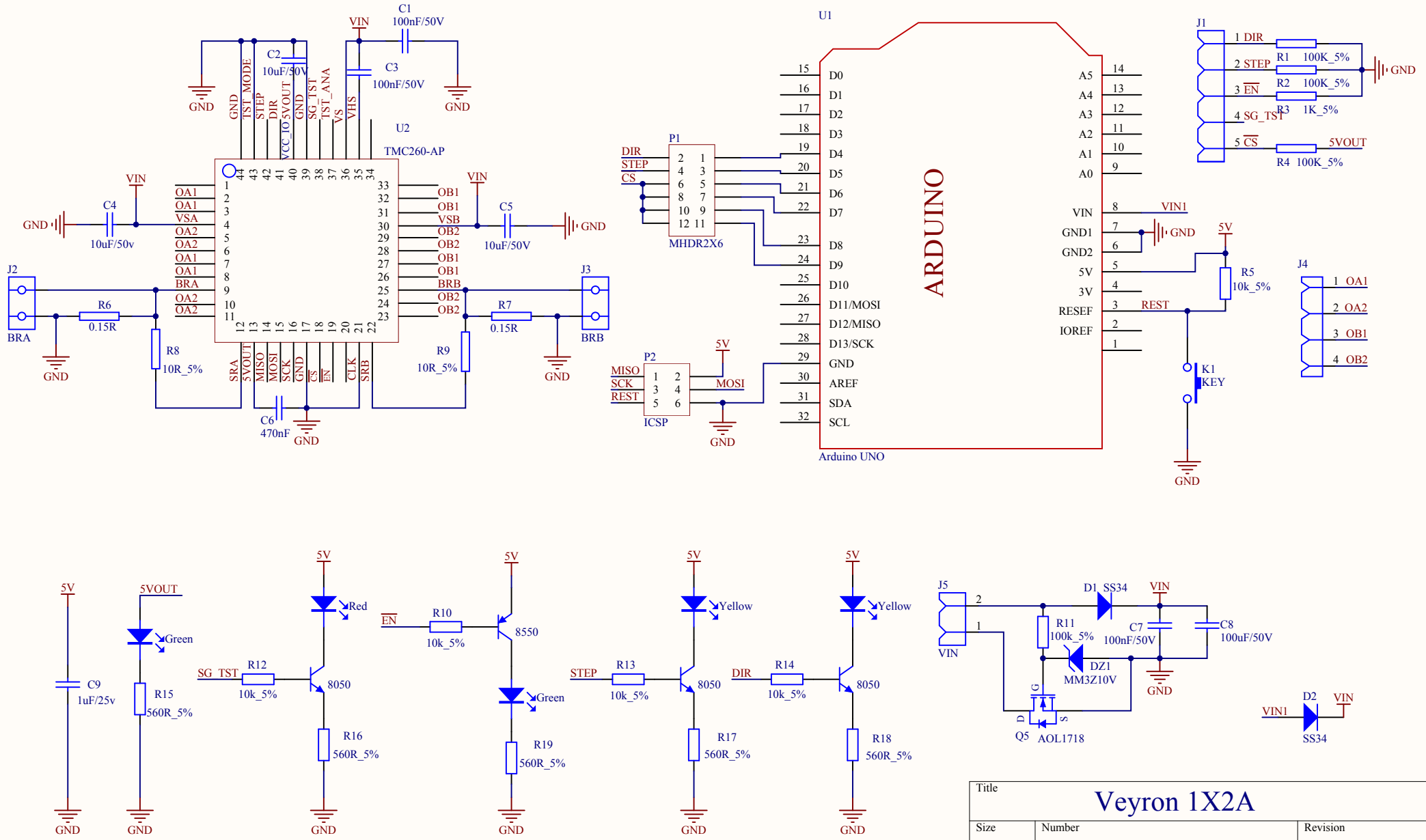

Title	Veyron 1X2A	
Size A4	Number	Revision
Date: 2015/6/2		Sheet of
File: E:\	\..\StepMotor.SchDoc	Drawn By: