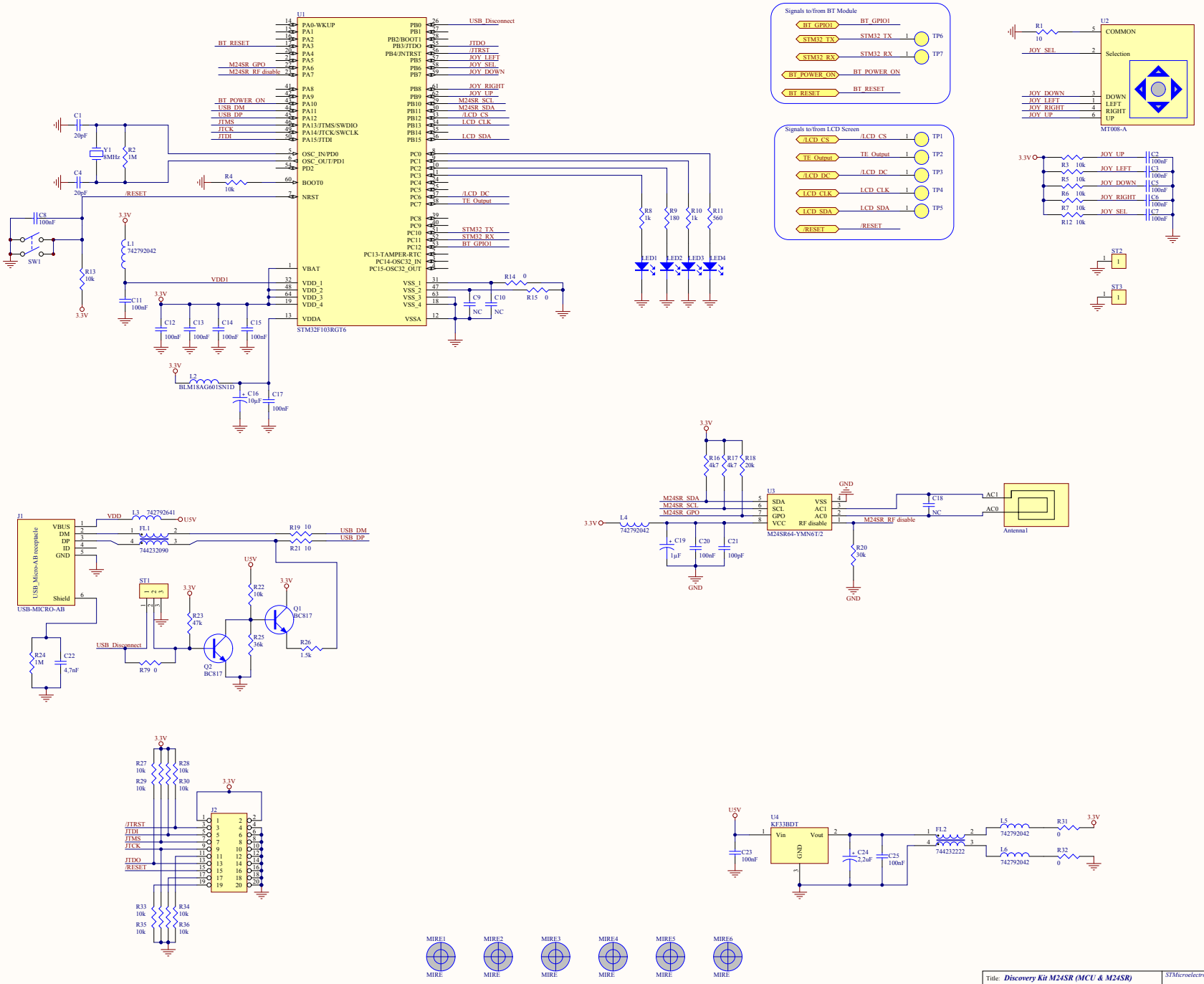

Title: *Discovery Kit M24SR (MCU & M24SR)*		STMicroelectronics
Size: C	Reference: MB1138	Revision: B-01
Date: 02/12/2013	Sheet: 1 of 3	MMY Division

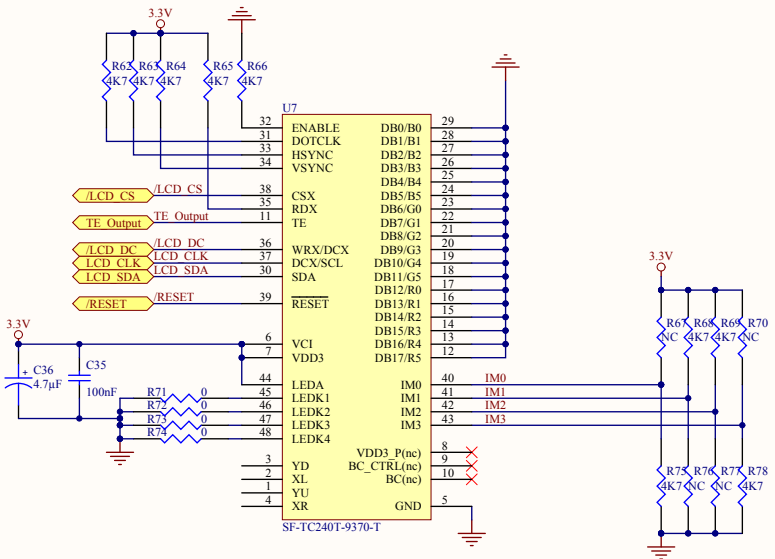

Title: ***Discovery Kit M24SR (LCD Screen)***			*ST Microelectronics*
Size: A3	Reference: MB1138	Revision: B-01	*MMY Division*
Date: 02/12/2013		Sheet: 2 of 3	

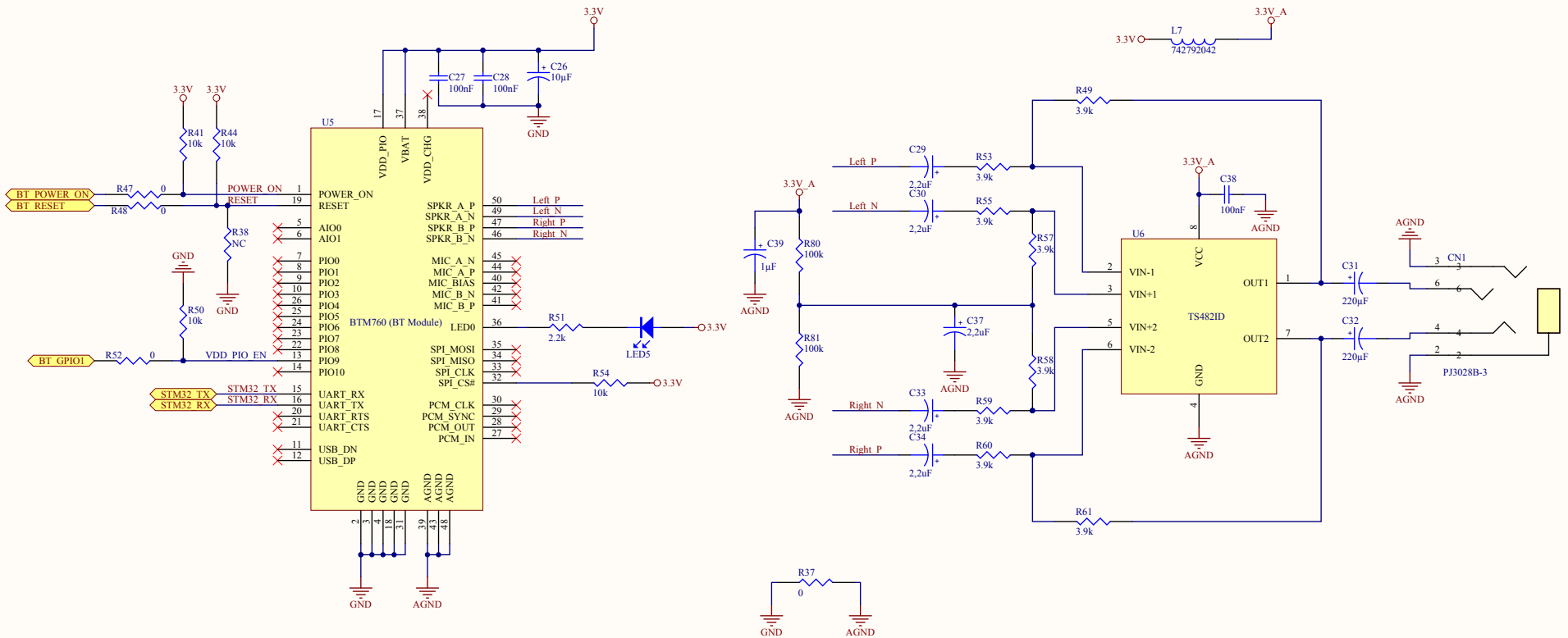

Title: ***Discovery Kit M24SR (BT Module)***			*ST Microelectronics*
Size: A3	Reference: MB1138	Revision: B-01	*MMY Division*
Date: 02/12/2013		Sheet: 3 of 3	