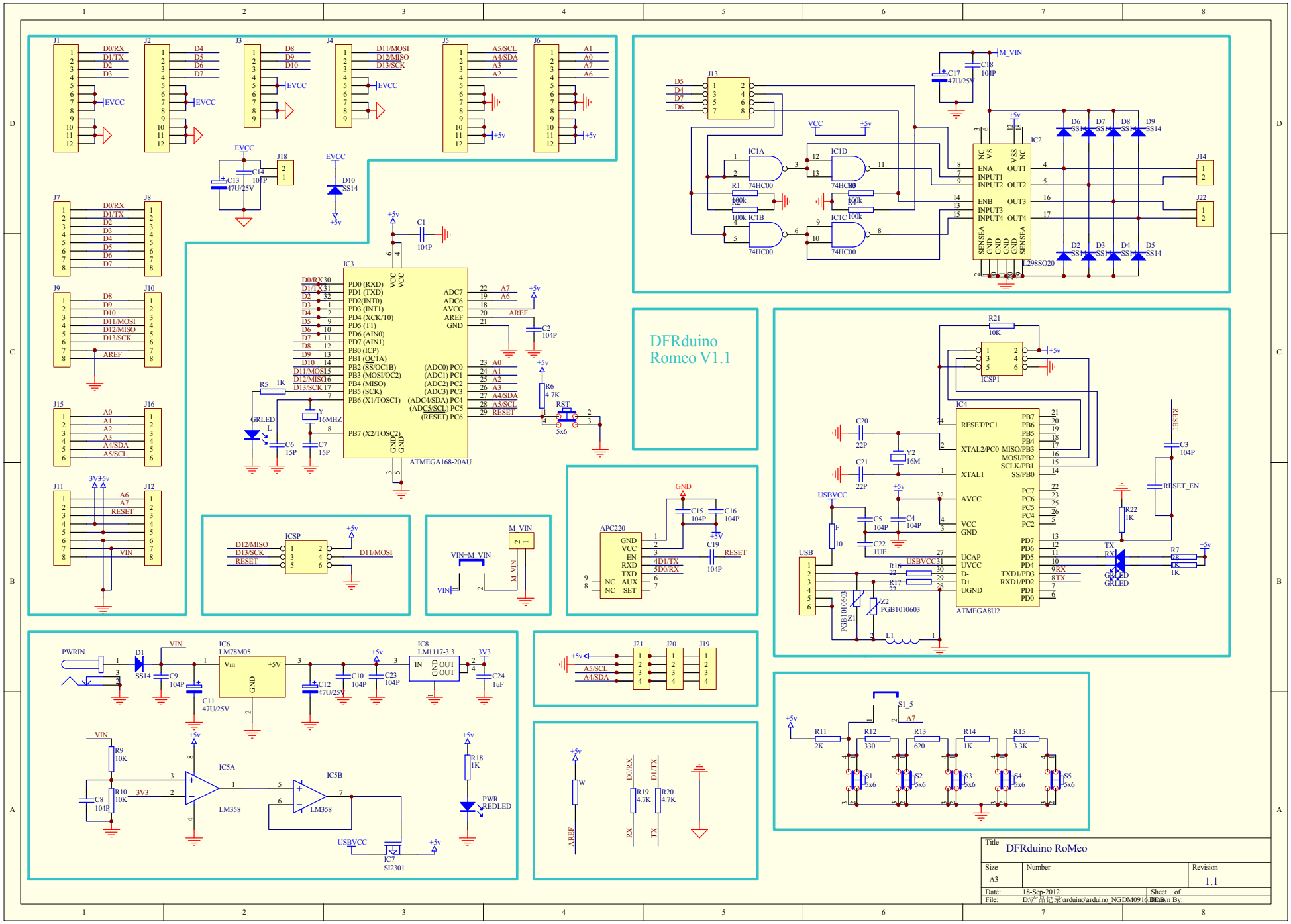
DFRduino
Romeo V1.1
IC3
ATMEGA168-20AU
IC2
L298SO20
IC4
ATMEGA8U2
IC6
LM78M05
IC8
LM1117-3.3
IC5A
IC5B
LM358
IC7
SI2301
APC220
ICSP
ICSP1
USB
PWRIN
PWR
REDLED
Title
DFRduino RoMeo
Size
A3
Number
Revision
1.1
Date:
18-Sep-2012
Sheet of
File:
Drawn By: