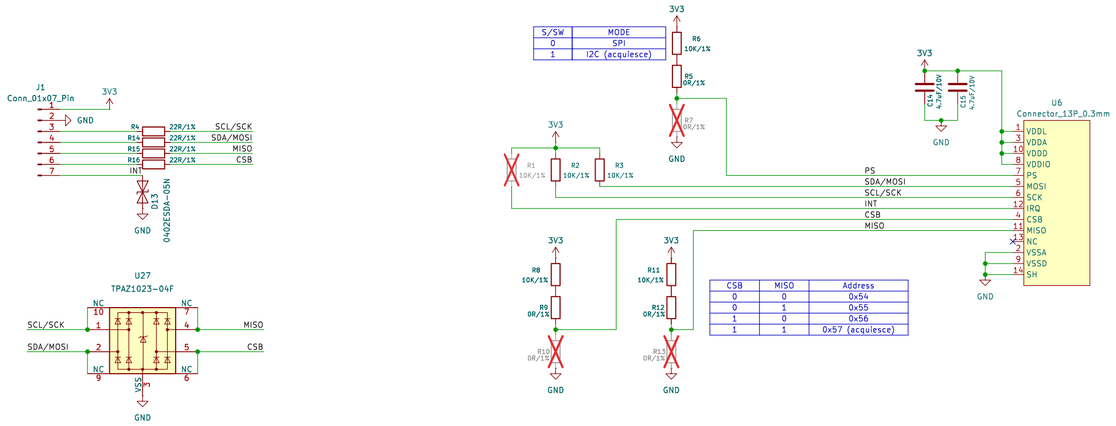

CSB	MISO	Address
0	0	0x54
0	1	0x55
1	0	0x56
1	1	0x57 (acquiesce)

H1
MountingHole

H2
MountingHole

FID1
Fiducial

FID2
Fiducial

DFROBOT
DRIVE THE FUTURE

DFRobot

Title: Fermion:BMV080 PM2.5 Sensor		
KiCad E.D.A. 9.0.3-3-gc3f6e7beb1		
Drawn:YXD	SKU:SEN0663	Rev: V1.0.0
Size: A2	Page: 1/1	Date: 2025-10-15

100