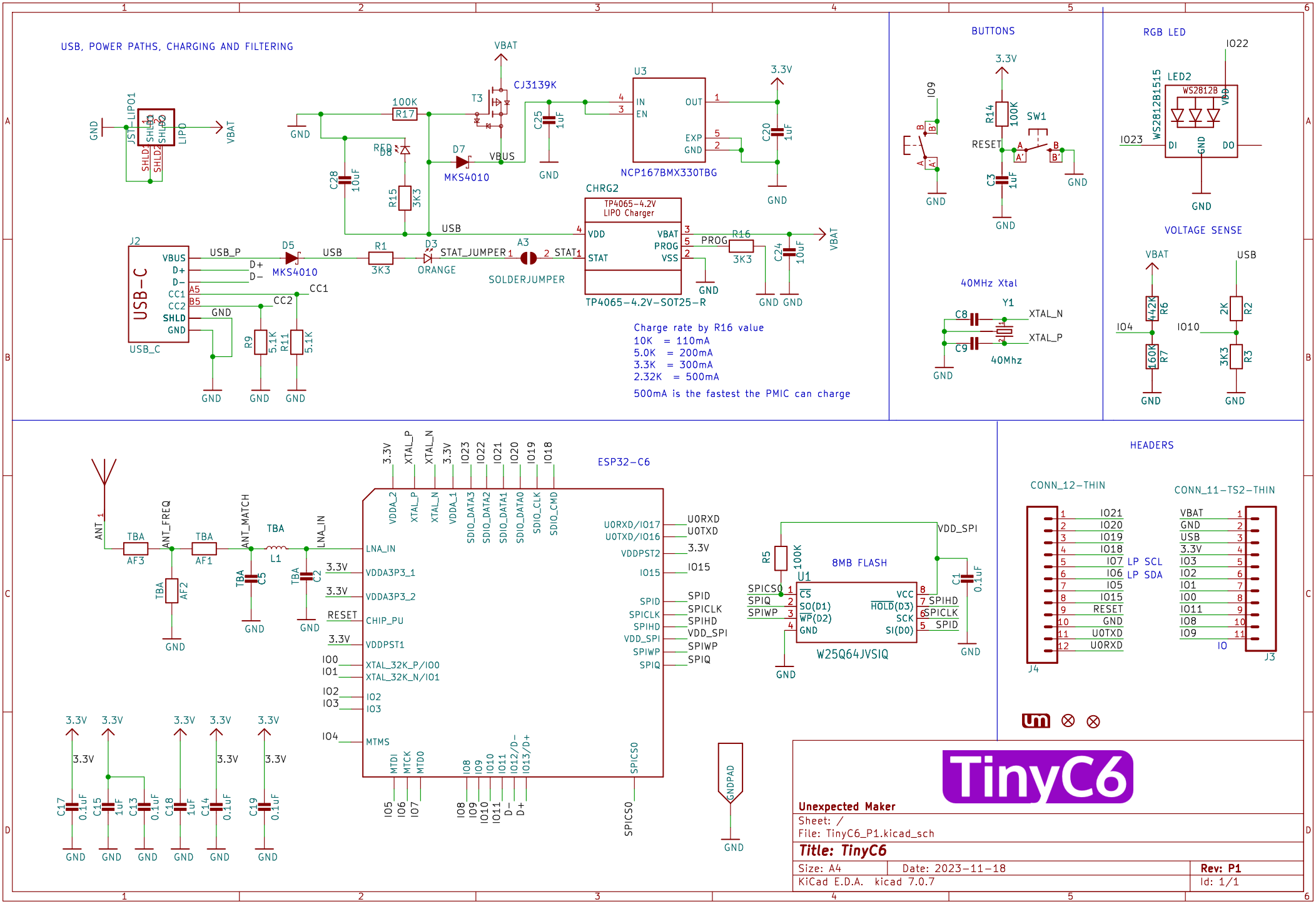
USB, POWER PATHS, CHARGING AND FILTERING
JST_LIPO1
LIPO
VBAT
GND
100K
R17
T3
CJ3139K
C25
1uF
U3
IN
EN
OUT
EXP
GND
NCP167BMX330TBG
3.3V
C20
1uF
RED
D8
D7
MKS4010
VBUS
C28
10uF
R15
3K3
CHRG2
TP4065-4.2V
LIPO Charger
VDD
STAT
VBAT
PROG
VSS
TP4065-4.2V-SOT25-R
USB
J2
USB-C
VBUS
D+
D-
CC1
CC2
SHLD
GND
USB_P
D5
MKS4010
R1
3K3
D3
ORANGE
STAT_JUMPER
A3
SOLDERJUMPER
STAT
R16
3K3
C24
10uF
R9
5.1K
R11
5.1K
Charge rate by R16 value
10K = 110mA
5.0K = 200mA
3.3K = 300mA
2.32K = 500mA
500mA is the fastest the PMIC can charge
BUTTONS
IO9
3.3V
R14
100K
SW1
RESET
C3
1uF
RGB LED
IO22
LED2
WS2812B1515
WS2812B
IO23
DI
DO
VOLTAGE SENSE
VBAT
USB
R6
442K
IO4
R7
160K
IO10
R2
2K
R3
3K3
40MHz Xtal
Y1
C8
C9
XTAL_N
XTAL_P
40Mhz
ESP32-C6
3.3V
XTAL_P
XTAL_N
IO23
IO22
IO21
IO20
IO19
IO18
VDDA_2
VDDA_1
SDIO_DATA3
SDIO_DATA2
SDIO_DATA1
SDIO_DATA0
SDIO_CLK
SDIO_CMD
ANT
TBA
AF3
ANT_FREQ
AF1
ANT_MATCH
L1
LNA_IN
AF2
C5
C2
VDDA3P3_1
VDDA3P3_2
RESET
CHIP_PU
VDDPST1
IO0
IO1
XTAL_32K_P/IO0
XTAL_32K_N/IO1
IO2
IO3
IO4
MTMS
MTDI
MTCK
MTDO
IO8
IO9
IO10
IO11
IO12/D-
IO13/D+
SPICS0
U0RXD/IO17
U0TXD/IO16
VDDPST2
IO15
SPID
SPICLK
SPIHD
VDD_SPI
SPIWP
SPIQ
U0RXD
U0TXD
R5
100K
8MB FLASH
U1
CS
SO(D1)
WP(D2)
GND
VCC
HOLD(D3)
SCK
SI(D0)
W25Q64JVSIQ
C1
0.1uF
C17
C15
C13
C18
C14
C19
0.1uF
1uF
GNDPAD
HEADERS
CONN_12-THIN
J4
IO21
IO20
IO19
IO18
IO7 LP SCL
IO6 LP SDA
IO5
IO15
RESET
GND
U0TXD
U0RXD
CONN_11-TS2-THIN
J3
VBAT
GND
USB
3.3V
IO3
IO2
IO1
IO0
IO11
IO8
IO9
IO
TinyC6
Unexpected Maker
Sheet: /
File: TinyC6_P1.kicad_sch
Title: TinyC6
Size: A4
Date: 2023-11-18
Rev: P1
KiCad E.D.A. kicad 7.0.7
Id: 1/1