POWER PATHS, CHARGING AND FILTERING

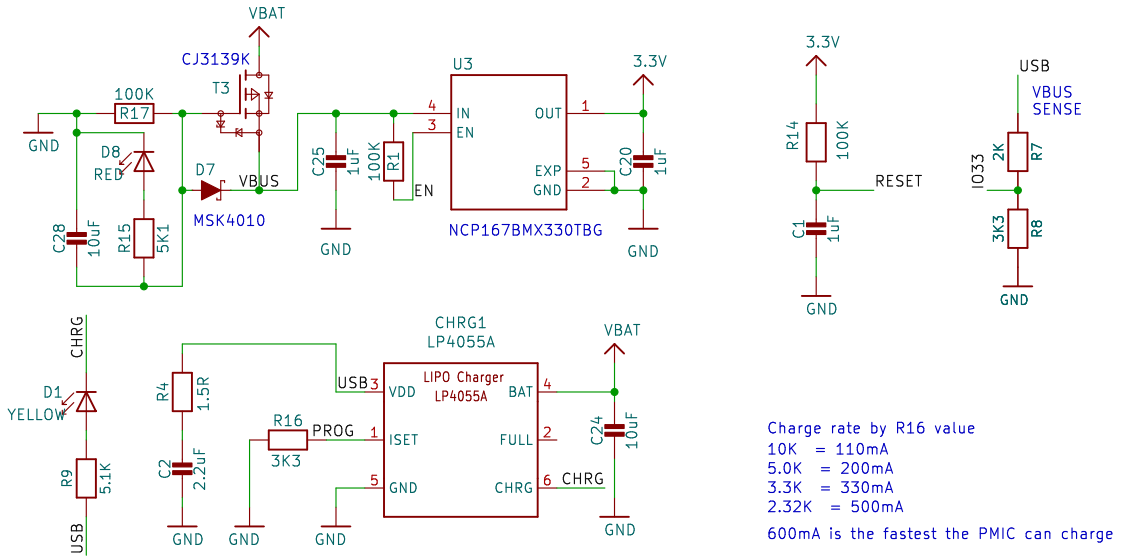

Charge rate by R16 value
10K = 110mA
5.0K = 200mA
3.3K = 330mA
2.32K = 500mA

600mA is the fastest the PMIC can charge

BATTERY FUEL GAUGE

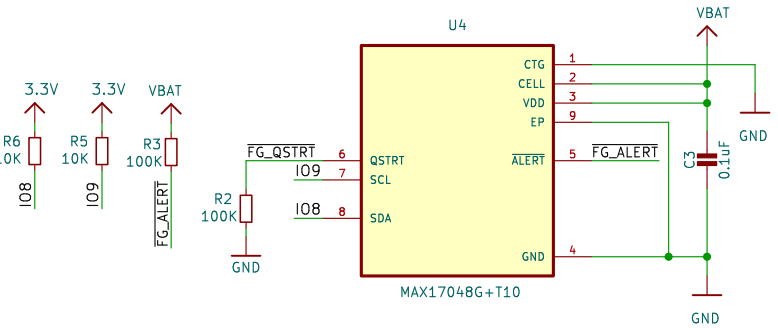

RGB LED

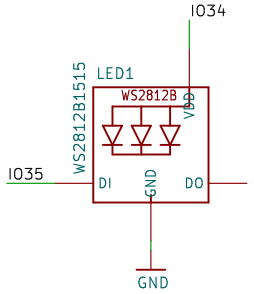

HEADERS

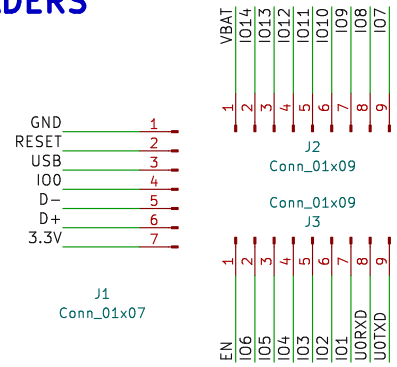

ESP32-S3-PICO-1-N8R2

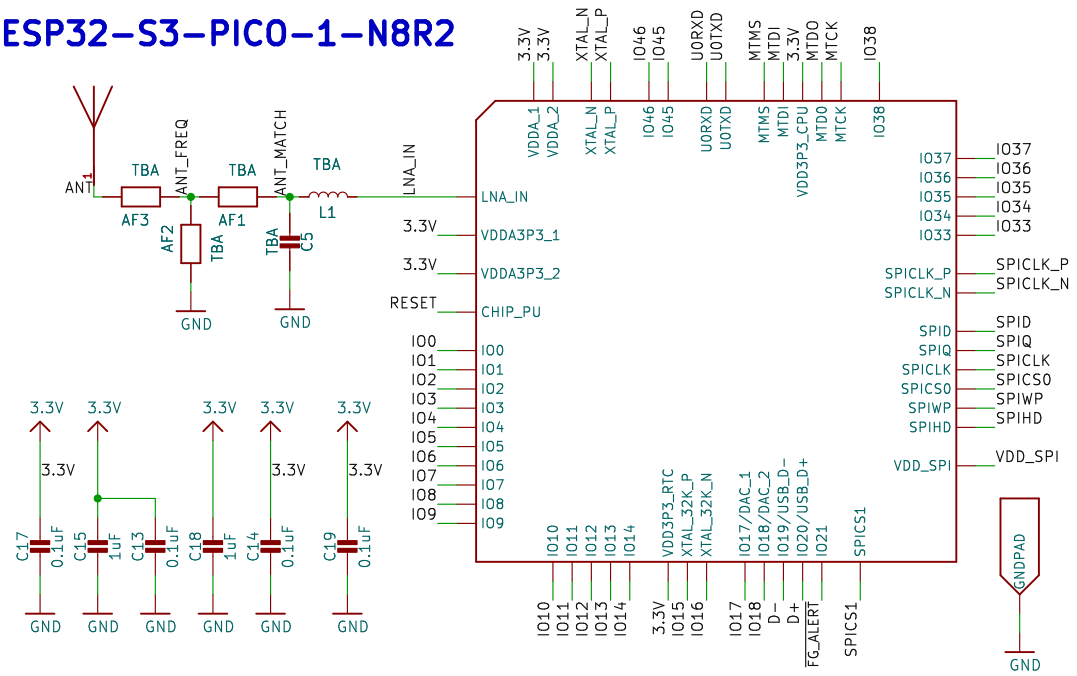

OMGS3

Unexpected Maker

Sheet: /
File: OMGS3_P1_1.27.kicad_sch

Title: OMGS3

Size: A4	Date: 2024-07-20	**Rev: P1**
KiCad E.D.A. 8.0.4		Id: 1/1