Tab5

SKU:C145/K145

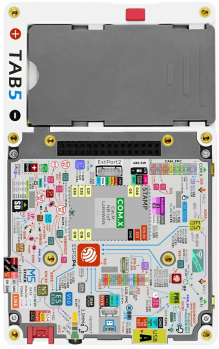

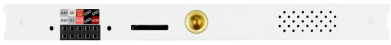

Description

Tab5 is a highly expandable, portable smart-IoT terminal development device for developers, integrating a dual-core architecture and rich hardware resources. The main controller adopts the **ESP32-P4** SoC based on the RISC-V architecture, with 16MB Flash and 32MB PSRAM. The wireless module uses the ESP32-C6-MINI-1U, supporting Wi-Fi 6. Its antenna system can freely switch between the built-in 3D antenna and an external MMCX antenna interface, flexibly adapting to various deployment environments to ensure data throughput and low-latency control.

In terms of visual and interactive experience, the Tab5 is equipped with a 5″ 1280×720 IPS touchscreen featuring an MIPI-DSI interface, delivering a smooth and responsive touch interaction. It also comes with an SC2356 2MP **camera** (1600×1200) that uses an MIPI-CSI interface, enabling HD video recording, image processing, and edge AI applications such as facial recognition and object tracking.

Peripheral interfaces include **USB Type-A** (Host) and **USB Type-C** (USB 2.0 OTG) for mouse, keyboard and other devices. Industrial users can leverage **RS-485** (SIT3088 + switchable 120Ω terminator). HY2.0-4P, M5-Bus, GPIO_EXT headers, a **microSD** slot, and reserved STAMP pads (for Cat-M, NB-IoT, LoRaWAN, etc.) enable versatile sensor and communication expansion. Reset/Boot buttons provide quick reset and download-mode entry.

Audio features consist of an ES8388 **codec** plus an ES7210 AEC front-end, a **dual-mic** array, 3.5mm headphone jack and speaker, supporting Hi-Fi recording/playback and accurate voice recognition. A BMI270 **6-axis sensor** (accelerometer + gyroscope, interrupt wake-up) can wake the MCU in motion-tracking scenarios, boosting response efficiency in low-power mode.

For time and power, Tab5 integrates an RX8130CE **RTC** (timed interrupt wake-up). The base accepts a removable NP-F550 **Li-ion battery** and features MP4560 buck-boost, IP2326 charge management, and INA226 real-time **monitoring** for stable standalone operation.

A 1/4″-20 tripod nut on the side allows direct mounting to a tripod or bracket.

Applications include smart-home control, remote monitoring, industrial automation, IoT prototyping and education, offering a full-featured, easily expandable high-performance platform.

Tutorial & Quick Start

UiFlow2

This tutorial shows how to control Tab5 with the UiFlow2 graphical platform.

Arduino IDE

This tutorial explains how to program Tab5 with the Arduino IDE.

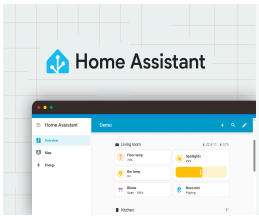

Home Assistant

This demo showed how to turn Tab5 into a Home Assistant HMI

Features

- ESP32-P4 dual-core MCU
- ESP32-C6 wireless module
- 2.4 GHz Wi-Fi 6
- Built-in 3D antenna & MMCX external antenna port
- 5-inch IPS TFT display, resolution 1280×720 (720P)
- SC2356 2MP camera
- USB Type-A Host + USB Type-C OTG

- RS485 industrial interface
- HY2.0-4P & M5-Bus expansion
- microSD card slot
- Stamp expansion pads
- ES8388 audio codec
- ES7210 AEC dual microphones
- 1W speaker + 3.5mm headphone jack
- BMI270 6-axis sensor
- RX8130CE real-time clock
- Reset/Boot & Power keys
- Removable NP-F550 battery
- Standard 1/4"-20 tripod-mount nut
- Development Platform
  - UiFlow2
  - Arduino IDE
  - ESP-IDF
  - PlatformIO

Includes

Product Note

The Tab5 Kit is a complete set with a removable NP-F550 Li-ion battery, whereas the standard Tab5 has no battery and requires an external power source or a separately purchased battery.

Tab5 (SKU:C145)

- 1 x Tab5
- 1 x 1.25-6P Single-ended Terminal Cable

Tab5 Kit (SKU:K145)

- 1 x Tab5 Kit
- 1 x 1.25-6P Single-ended Terminal Cable
- 1 x NP-F550 2000mAh Removable Battery

Applications

- Smart-home control
- Remote monitoring systems
- IoT device development
- Industrial automation

Specifications

Specification	Parameter
Main Controller SoC	ESP32-P4NRW32@RISC-V 32-bit Dual-core 360MHz + LP Single-core 40MHz
Wireless Module SoC	ESP32-C6-MINI-1U
Flash	16MB
PSRAM	32MB
Wi-Fi	2.4 GHz Wi-Fi 6, Thread, Zigbee
Antenna	Built-in 3D antenna & 2 x MMCX external antenna ports
Display	Uses a 5-inch IPS TFT display with a resolution of 1280×720 (720P), equipped with an integrated display and touch driver IC: ST7123
Camera	SC2356 @ 2MP (1600×1200), via MIPI-CSI interface
Audio Chip	ES8388 codec, ES7210 AEC front end
Microphone	Dual microphone system (AEC echo cancellation)
Speaker	1W@8Ω NS4150B
Headphone Jack	3.5mm
USB Ports	USB Type-A (Host), USB Type-C (USB 2.0 OTG)
RS485 Port	SIT3088 (120Ω switchable terminal resistor) Power supply range: 6 ~ 24V
Expansion Interface	1× HY2.0-4P, 1× M5-Bus, GPIO_EXT expansion bus
Storage Expansion	microSD card slot
Extensible Stamp Interface	Stamp pads (support Cat.M / NB-IoT / LoRaWAN and other modules)
Motion Sensor	BMI270 six-axis (accelerometer + gyroscope, support interrupt wake-up)

Specification	Parameter
RTC	RTC Chip: RX8130CE (supports timed interrupt wake-up), RTC supercapacitor specification: 70000μF/3.3V, size Φ4.8×1.4mm
Reset/Boot Button	1x Button, for power on/off and entering download mode
Charging Management	IP2326 charging management chip
Real-time Power Monitoring	INA226 (bus current / voltage monitoring)
Battery	NP-F550 removable lithium battery, 7.4V@2000mAh (14.8 Wh)
Battery Life	Under standard usage environment (screen brightness 50%, Wi-Fi always on, background tasks running), Tab5 built-in battery discharges from full (8.23 V) to shutdown threshold (6.0 V), lasting about 6 hours.
Operating Temperature	0 ~ 40°C
Product Size	Tab5: 128.0 x 80.0 x 12.0mm Tab5 Kit: 128.0 x 80.0 x 26.7mm
Product Weight	Tab5: 124.5g Tab5 Kit: 277.4g Battery: 97.9g
Package Size	Tab5: 148.0 x 103.0 x 21mm Tab5 Kit: 191.0 x 103.0 x 25.0mm
Gross Weight	Tab5: 162.5g Tab5 Kit: 277.4g

Learn

Tab5 Power Supply

Tab5 Power Supply Notes

Before disconnecting the power or replacing the battery, please perform a shutdown first. If the power is disconnected directly, wait 5 seconds before powering on again; otherwise, the IMU sensor may fail to initialize properly due to abnormal voltage.

Tab5 Charging

Tab5 Charging Notes

Tab5 can only be charged after the device is powered on and initialized. Charging is not possible when the device is off.

Power On/Off

Power On/Off

When the device is powered by a USB data cable or battery, press the power button once to power on while it is off. While it is on, double-press the power button to shut it down.

Download Mode

Download Mode

With the USB data cable connected or the battery supplying power, press and hold the reset button (about 2 seconds) until the internal green LED starts flashing rapidly. Release the button and the device will enter download mode, waiting for firmware flashing.

Battery Installation Notes

Battery Installation

With the device powered off, press and hold the red locking button on the side of the main board. Align the metal spring contacts on the back of the battery module with the “BATTERY” slot on the main board, then slide it downward along the rail until the battery module fits flush with the main board. Release the red button to complete installation and start powering the device.

M5-Bus Expansion

M5-Bus Expansion

As shown below, the back of the Tab5 integrates an M5-Bus connector, which can be used to expand Module series products.

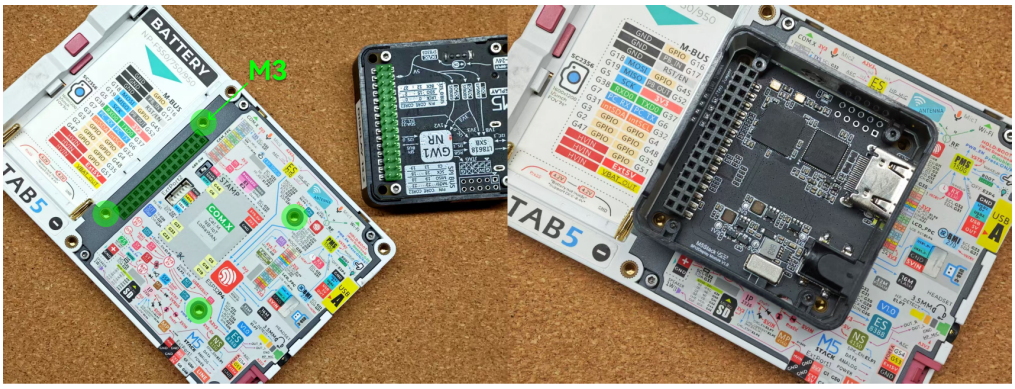

Schematics

- Tab5 Overall Design Block Diagram
- Tab5 Schematics PDF

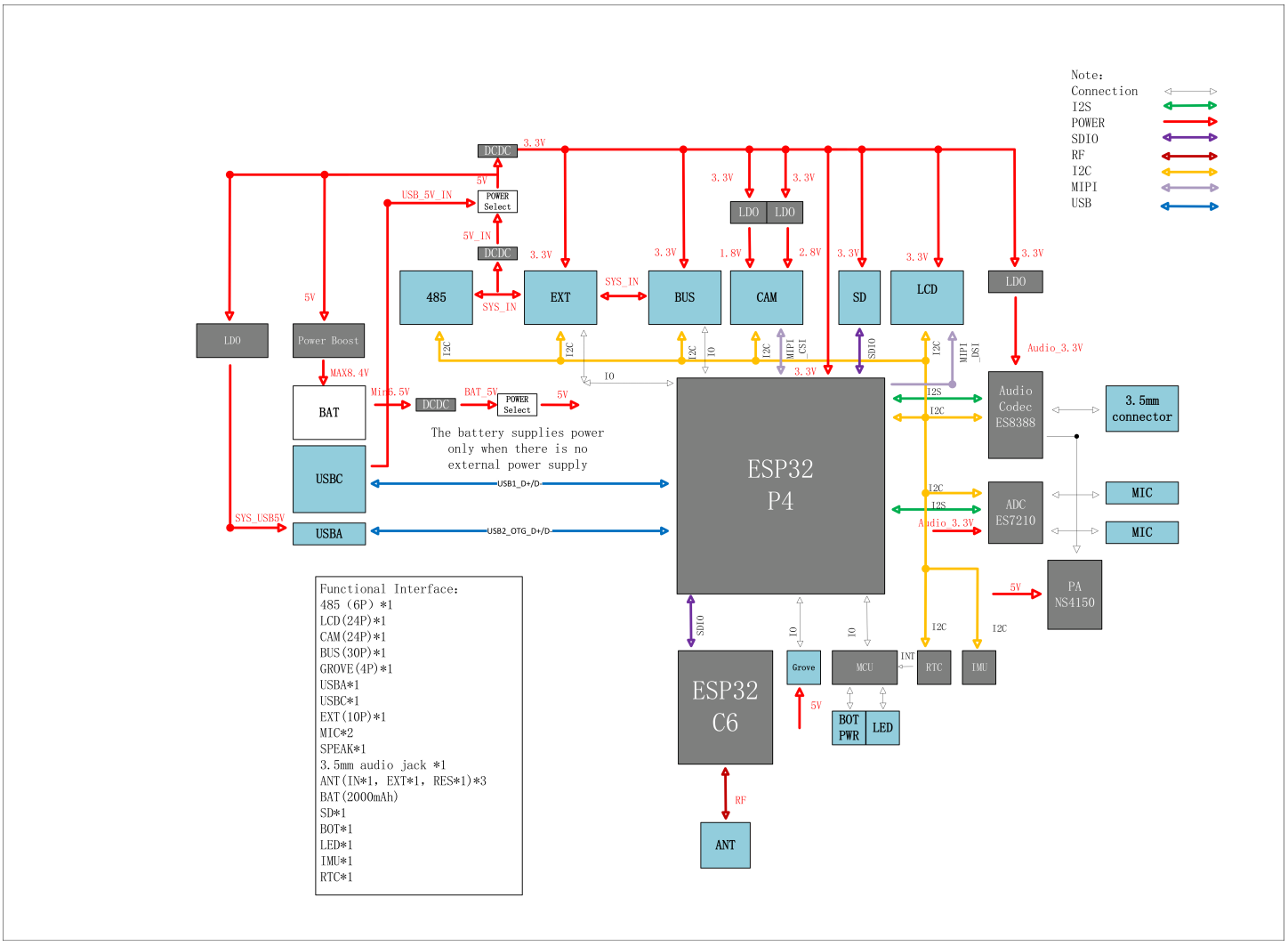
Note:
Connection
I2S
POWER
SDIO
RF
I2C
MIPI
USB
DCDC
3.3V
5V
USB_5V_IN
POWER Select
5V_IN
LDO
LDO
LDO
485
EXT
SYS_IN
BUS
CAM
SD
LCD
LDO
Audio_3.3V
LDO
Power Boost
MAX8.4V
BAT
USBC
USBA
SYS_USB5V
Min3.5V
BAT_5V
The battery supplies power only when there is no external power supply
USB1_D+/D-
USB2_OTG_D+/D-
ESP32 P4
Audio Codec ES8388
3.5mm connector
ADC ES7210
MIC
MIC
PA NS4150
ESP32 C6
Grove
MCU
RTC
IMU
BOT PWR
LED
ANT
Functional Interface:
485 (6P) *1
LCD(24P)*1
CAM(24P)*1
BUS(30P)*1
GROVE(4P)*1
USBA*1
USBC*1
EXT(10P)*1
MIC*2
SPEAK*1
3.5mm audio jack *1
ANT(IN*1, EXT*1, RES*1)*3
BAT(2000mAh)
SD*1
BOT*1
LED*1
IMU*1
RTC*1

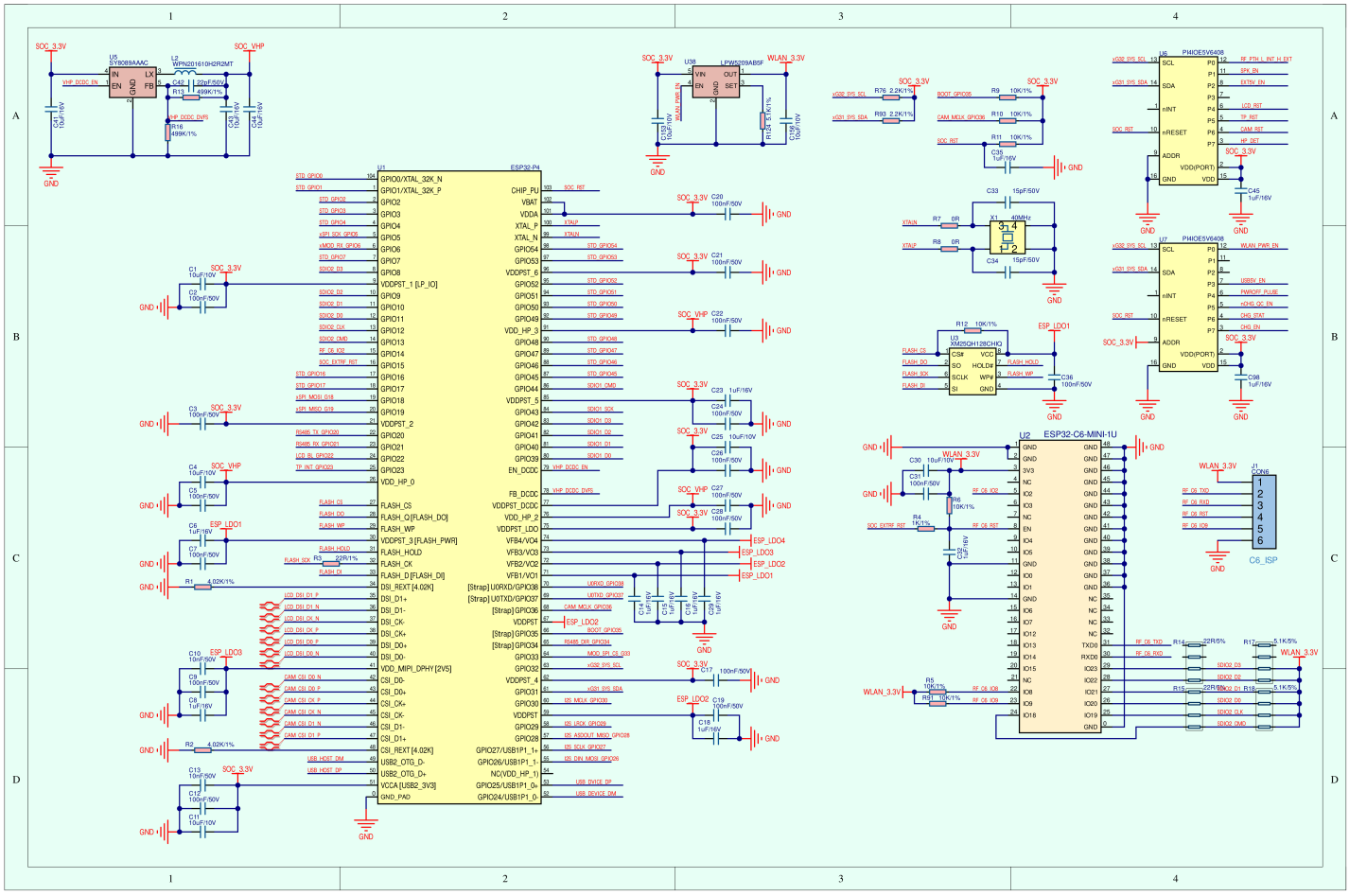
ESP32-P4
ESP32-C6-MINI-1U

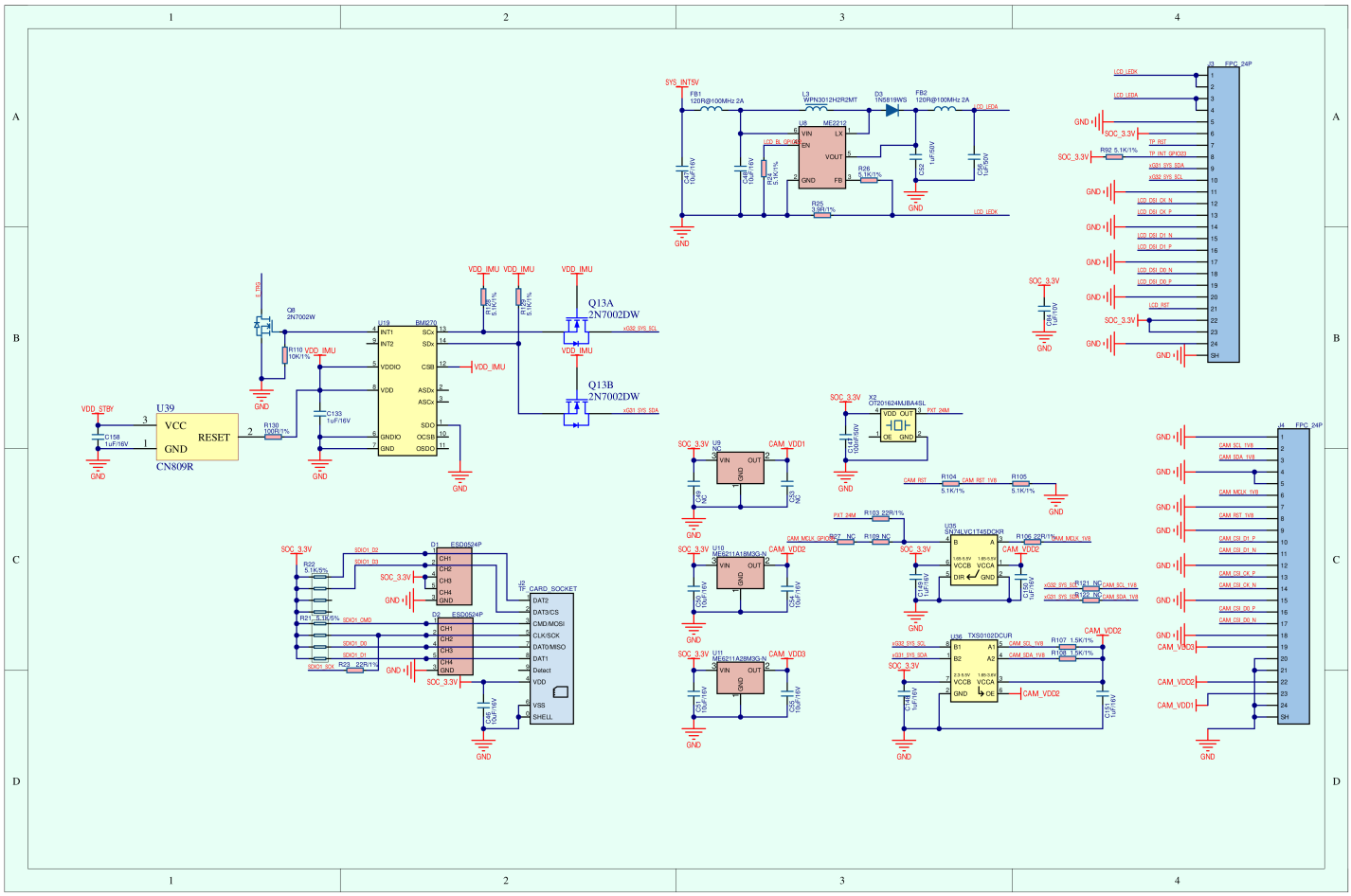

U39
VCC
RESET
GND
CN809R
Q13A
2N7002DW
Q13B
2N7002DW
U19
BMI270
U8
ME2212
U35
SN74LVC1T45DCKR
U36
TXS0102DCUR
U10
ME6211A18M3G-N
U11
ME6211A28M3G-N
J3
FPC_24P
J4
FPC_24P
J2
TF_CARD_SOCKET
D1
ESD0524P
D2
ESD0524P
SYS_INT5V
VDD_IMU
SOC_3.3V
CAM_VDD1
CAM_VDD2
CAM_VDD3
GND

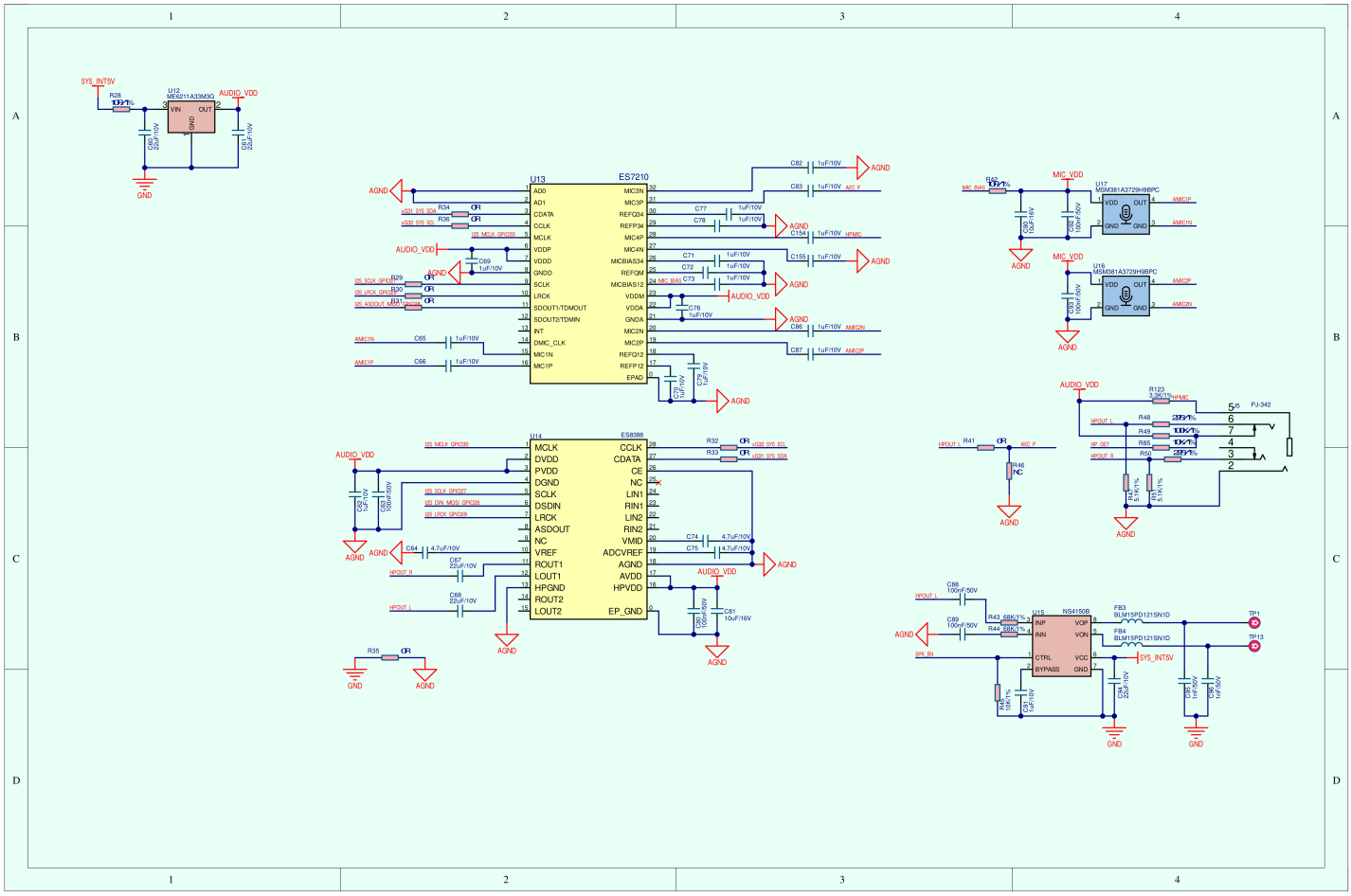
U12
ME6211A33M3G
SYS_INT5V
AUDIO_VDD
R28
GND
U13
ES7210
AD0
AD1
CDATA
CCLK
MCLK
VDDP
VDDD
GNDD
SCLK
LRCK
SDOUT1/TDMOUT
SDOUT2/TDMIN
INT
DMIC_CLK
MIC1N
MIC1P
MIC3N
MIC3P
REFGD3
REFP3
MIC4P
MIC4N
MICBIAS34
REFGD
MICBIAS12
VDDM
VDDA
GNDA
MIC2N
MIC2P
REFGD12
REFP12
EPAD
AGND
MIC_VDD
U17
MSM381A3729H9BPC
U16
MSM381A3729H9BPC
U14
ES8388
MCLK
DVDD
PVDD
DGND
SCLK
DSDIN
LRCK
ASDOUT
NC
VREF
ROUT1
LOUT1
HPGND
ROUT2
LOUT2
CCLK
CDATA
CE
NC
LIN1
RIN1
LIN2
RIN2
VMID
ADCVREF
AGND
AVDD
HPVDD
EP_GND
U15
NS4150B
INP
INN
CTRL
BYPASS
VOP
VON
VCC
GND
FB3
BLM15PD121SN1D
FB4
BLM15PD121SN1D
TP1
TP13
SYS_INT5V
PJ-342

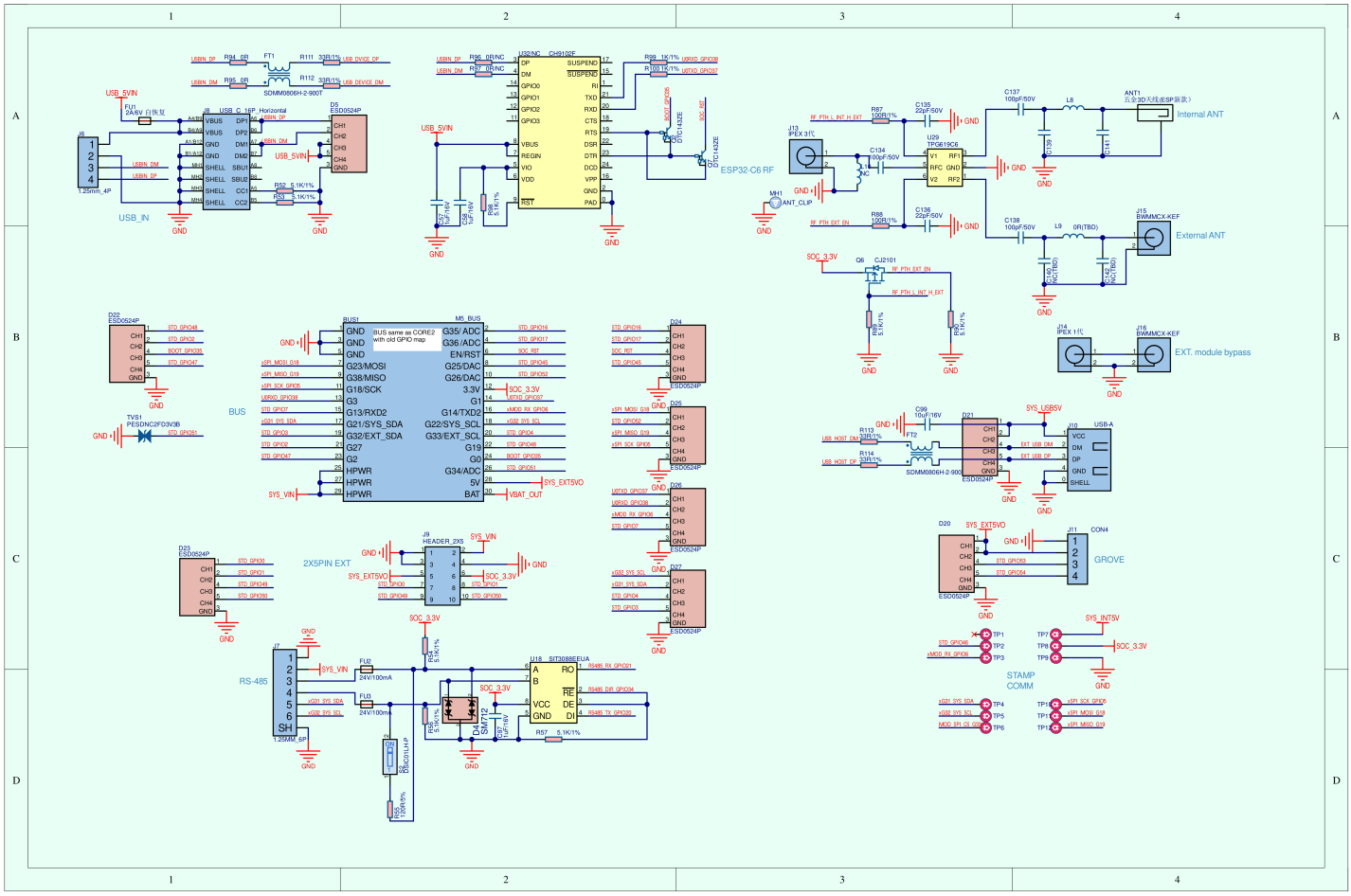
USB_IN
ESP32-C6 RF
Internal ANT
External ANT
EXT. module bypass
BUS
2X5PIN EXT
RS-485
GROVE
STAMP
COMM

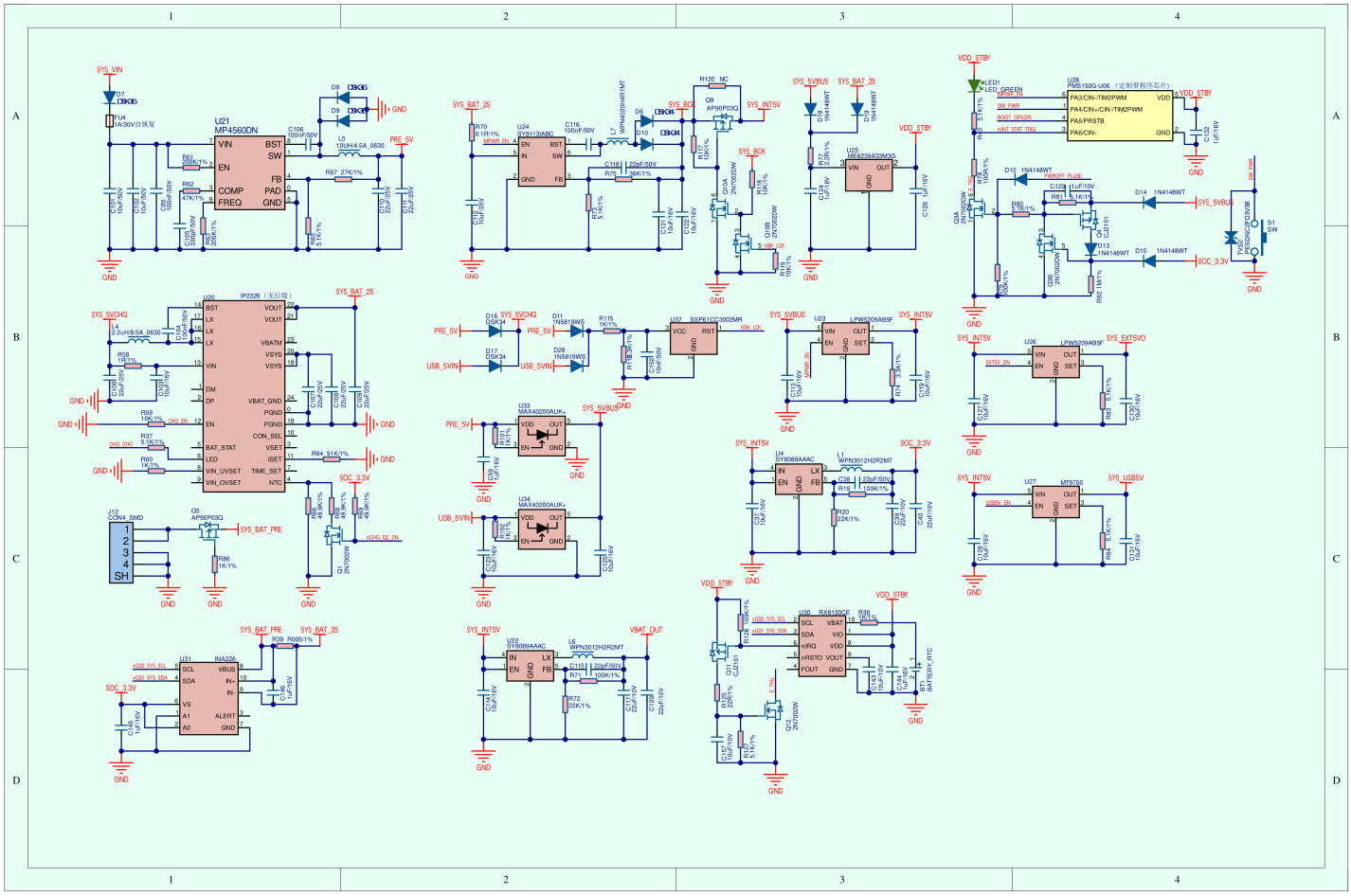

PinMap

CAM

ESP32-P4	CAM
G32	CAM_SCL
G31	CAM_SDA
G36	CAM_MCLK
CSI_DATAP1 (Dedicated)	CAM_D1P
CSI_DATAN1 (Dedicated)	CAM_D1N
CSI_CLKP (Dedicated)	CAM_CSI_CKP
CSI_CLKN (Dedicated)	CAM_CSI_CKN
CSI_DATAP0 (Dedicated)	CSI_DOP
CSI_DATAN0 (Dedicated)	CSI_DON

ES8388

ESP32-P4	G30	G27	G26	G29	G32	G31
ES8388 (0x10)	MCLK	SCLK	DSDIN	LRCK	SCL	SDA

ES7210

ESP32-P4	G30	G27	G28	G29	G32	G31
ES7210 (0x40)	MCLK	SCLK	ASDOUT	LRCK	SCL	SDA

LCD

ESP32-P4	ILI9881C / ST7123
G22	LEDA
DSI_CLKN (Dedicated)	DSI_CK_N
DSI_CLKP (Dedicated)	DSI_CK_P
DSI_DATAN1 (Dedicated)	DSI_D1_N
DSI_DATAP1 (Dedicated)	DSI_D1_P
DSI_DATAN0 (Dedicated)	DSI_D0_N
DSI_DATAP0 (Dedicated)	DSI_D0_P

Touch

ESP32-P4	G31	G32	G23
GT911 (0x14) / ST7123 (0x55)	SDA	SCL	TP_INT

BMI270 & RTC(RX8130CE) & INA226

ESP32-P4	G32	G31
BMI270 (0x68)	SCL	SDA
RX8130CE (0x32)	SCL	SDA
INA226 (0x41)	SCL	SDA

- Interrupt Wakeup (PMS150G-U06)

PMS150G-U06	PA6/CIN-
BMI270 (0x68)	INT(E_TRG)
RX8130CE	INT(E_TRG)

ESP32-C6

ESP32-P4	G11	G10	G9	G8	G13	G12	G15	G14
ESP32-C6	SDIO2_D0	SDIO2_D1	SDIO2_D2	SDIO2_D3	SDIO2_CMD	SDIO2_CK	RESET	IO2

microSD

ESP32-P4	G39	G40	G41	G42	G43	G44
microSD SPI Mode	MISO			CS	SCK	MOSI
microSD SDIO Mode	DAT0	DAT1	DAT2	DAT3	CLK	CMD

RS485

ESP32-P4	G21	G20	G34
SIT3088	RX	TX	DIR

HY2.0-4P

HY2.0-4P	Black	Red	Yellow	White
PORT.A	GND	5V	G53	G54

PI4IOE5V6408

ESP32-P4	G32	G31	CHIP_PU
PI4IOE5V6408-1 (0x43)	SCL	SDA	RST
PI4IOE5V6408-2 (0x44)	SCL	SDA	RST

PI4IOE5V6408-1 (0x43)	E1.P0	E1.P1	E1.P2	E1.P4	E1.P5	E1.P6	E1.P7
RF_PTH_L_INT_H_EXT	RF_INT_EXT_SWITCH						
NS4150B		SPK_EN					
EXT_5V_BUS			EXT5V_EN				
LCD				LCD_RST			
TP					TP_RST		
CAM						CAM_RST	
HEADPHONE							HP_DET

- RF_PTH_L_INT_H_EXT: Used to switch between the internal Wi-Fi antenna and the external SMA antenna. Low level selects the internal antenna, while high level selects the external antenna.
- EXT_5V_BUS: Provides 5V power to the Tab5 rear M5-Bus, the side 2.54-10P expansion port, and the HY2.0-4P interface. The power output can be controlled via EXT5V_EN.

PI4IOE5V6408-2 (0x44)	E2.P0	E2.P3	E2.P4	E2.P5	E2.P6	E2.P7
ESP32-C6	WLAN_PWR_EN					
USB-A		USB5V_EN				
DEVICE PWR			PWROFF_PLUSE			
IP2326 (CHARGE IC)				nCHG_QC_EN	CHG_STAT_LED	CHG_EN

- WLAN_PWR_EN: Enables power supply for the internal ESP32-C6 (Wi-Fi SoC).

M5-Bus

FUNC	PIN	LEFT	RIGHT	PIN	FUNC
	GND	1	2	G16	GPIO
	GND	3	4	G17	PB_IN
	GND	5	6	RST	EN
MOSI	G18	7	8	G45	GPIO
MISO	G19	9	10	G52	PB_OUT
SCK	G5	11	12	3V3	
RXD0	G38	13	14	G37	TXD0
PC_RX	G7	15	16	G6	PC_TX
Int SDA	G31	17	18	G32	Int SCL
GPIO	G3	19	20	G4	GPIO
GPIO	G2	21	22	G48	GPIO
GPIO	G47	23	24	G35	GPIO
	HVIN	25	26	G51	GPIO
	HVIN	27	28	5V	
	HVIN	29	30	BAT	

Tab5 Board PinMap Overview

Model Size

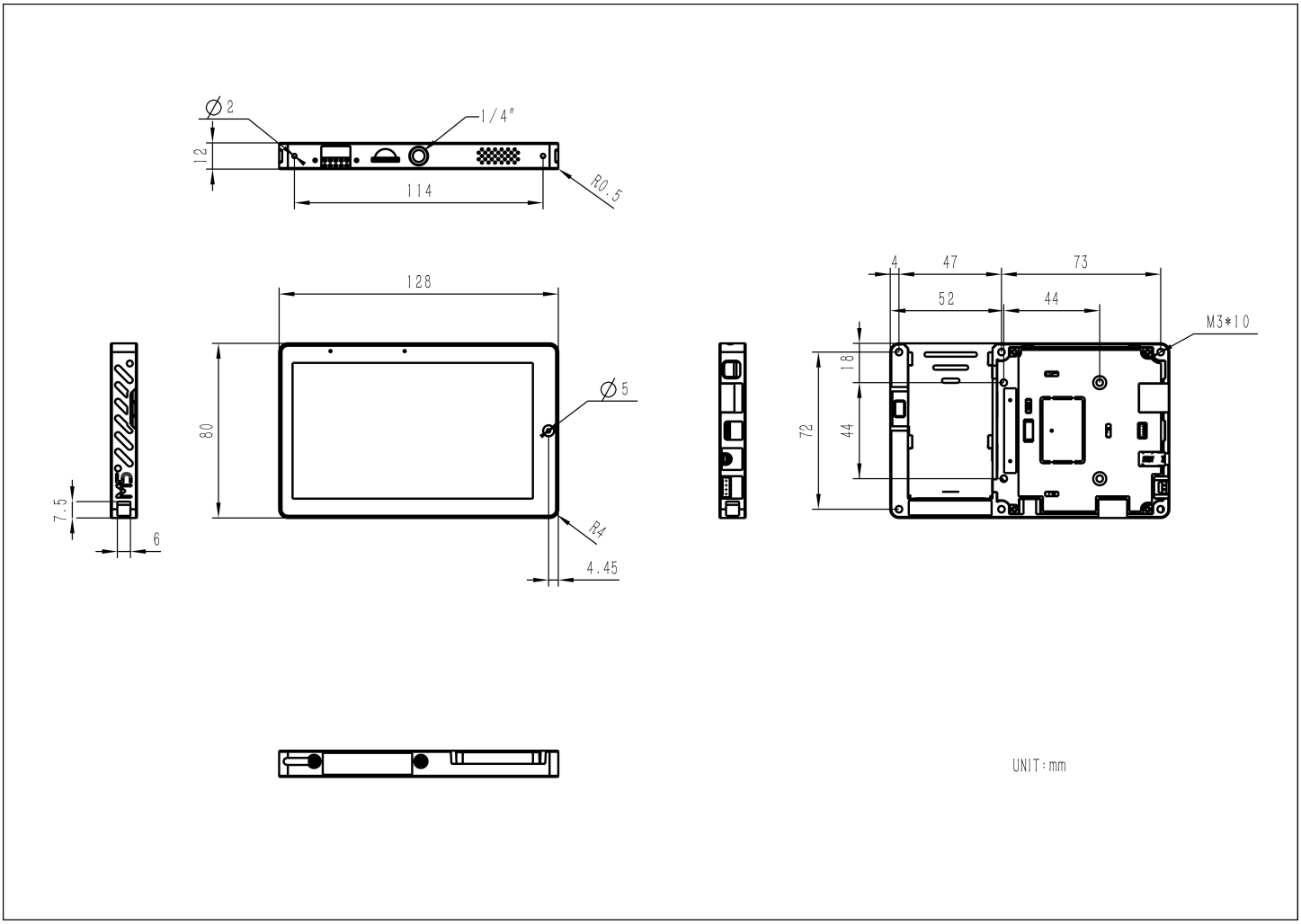

Datasheets

- ESP32-P4
- BMI270
- ESP32-C6
- NS4150B
- ES7210
- ES8388
- INA226
- IP2326
- NP-F550 Battery Report
- ST7123 Model Touch IC Interface Protocol Document
- ST7123 Model Screen Manual
- RX8130CE Datasheet
- RX8130CE Register Manual

Softwares

Arduino

- Tab5 Arduino Quick Start
- Tab5 Arduino M5Unified Library
- Tab5 Arduino M5GFX Library

Screen Driver Change

Starting from October 14, 2025, the Tab5' s original independent display driver ILI9881C and touch driver GT911 will be replaced by the integrated display-touch driver ST7123. Some early firmware builds may not run properly. The latest versions of M5Unified and M5GFX have already been adapted for compatibility with this new screen driver, and older programs can be recompiled using the latest M5Unified and M5GFX to achieve proper compatibility.

By checking the sticker on the back of the Tab5 product, you can confirm the driver model of the device.

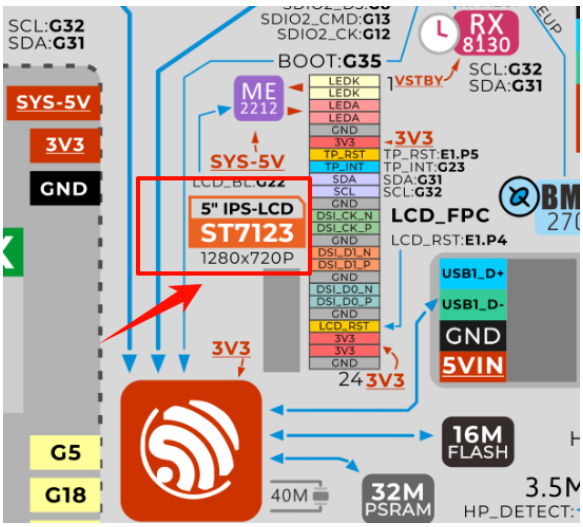

UiFlow2

- Tab5 UiFlow2 Quick Start

PlatformIO

```
[env:esp32p4_pioarduino]
platform = https://github.com/pioarduino/platform-espressif32.git#54.03.21
upload_speed = 1500000
monitor_speed = 115200
build_type = debug
framework = arduino
board = esp32-p4-evboard
board_build.mcu = esp32p4
board_build.flash_mode = qio
build_flags =
    -DBOARD_HAS_PSRAM
    -DCORE_DEBUG_LEVEL=5
    -DARDUINO_USB_CDC_ON_BOOT=1
    -DARDUINO_USB_MODE=1
lib_deps =
    https://github.com/M5Stack/M5Unified.git
    https://github.com/M5Stack/M5GFX.git
```

ESP-IDF

- Tab5 Factory Firmware Source Code
- Tab5 Factory Firmware Build Guide
- Tab5 ESP-IDF BSP

Easyloader

Easyloader	Download	Note
Tab5 User Demo	download	/

Others

- Tab5 Restore Factory Firmware Tutorial
- Tab5 Internal Wi-Fi Module Restore Factory Firmware

Video

- Tab5 product introduction & demo

C145_K145_Video.mp4

Version Change

Release Date	Product Change	Note
October 14, 2025	Tab5 screen driver solution optimization: the original independent display driver ILI9881C and touch driver GT911 have been replaced with the integrated display-touch driver ST7123.	/
May 9, 2025	First product release	/