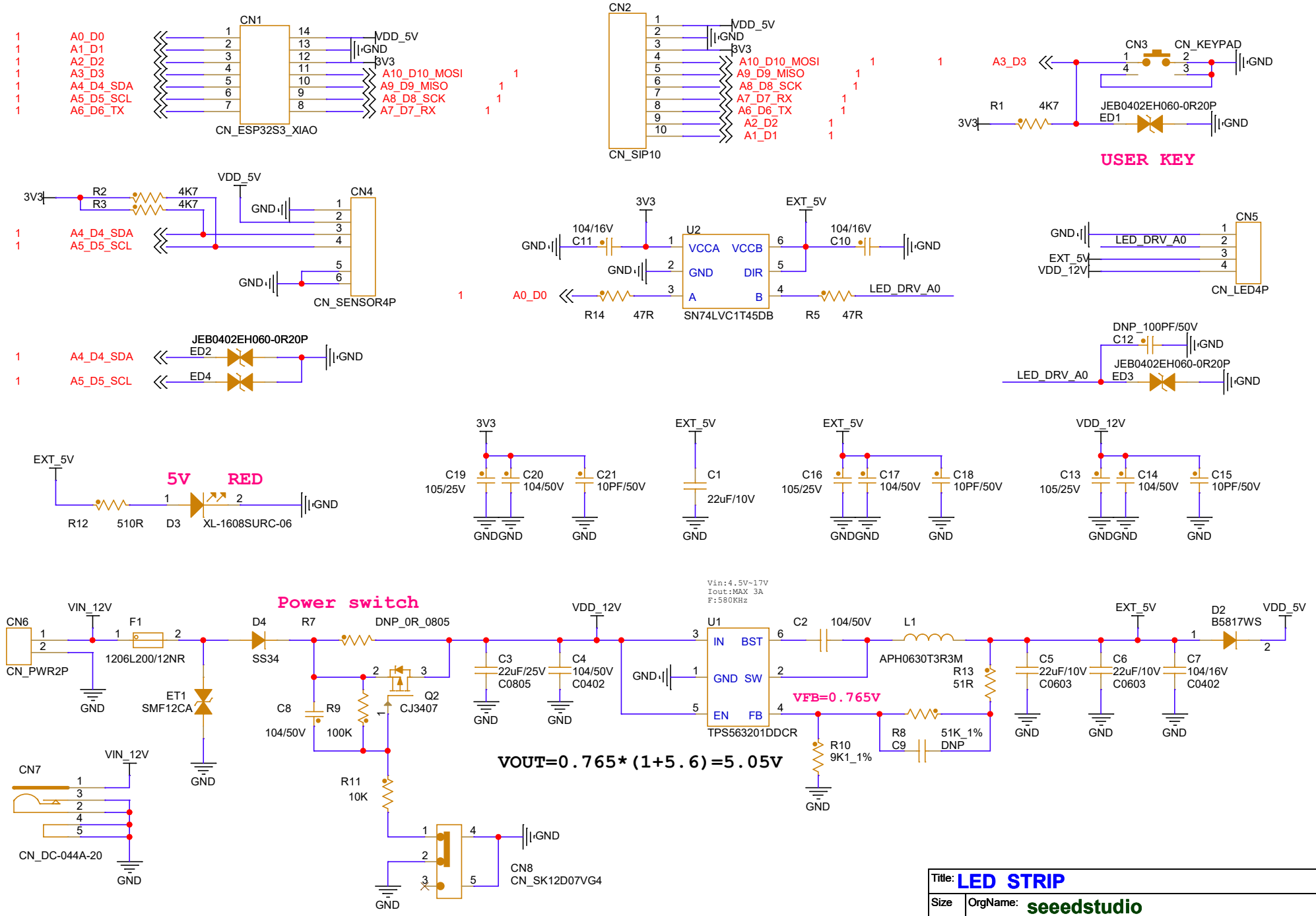

Title:	LED STRIP		
Size: Custom	OrgName: seeedstudio		Rev 1.0
	Designer: Gongjun	Mender:	
Date: Thursday, April 17, 2025		Sheet 1 of 1	