Step-Up/Step-Down Voltage Regulator S7V8x

©2014 Pololu Corporation
www.pololu.com

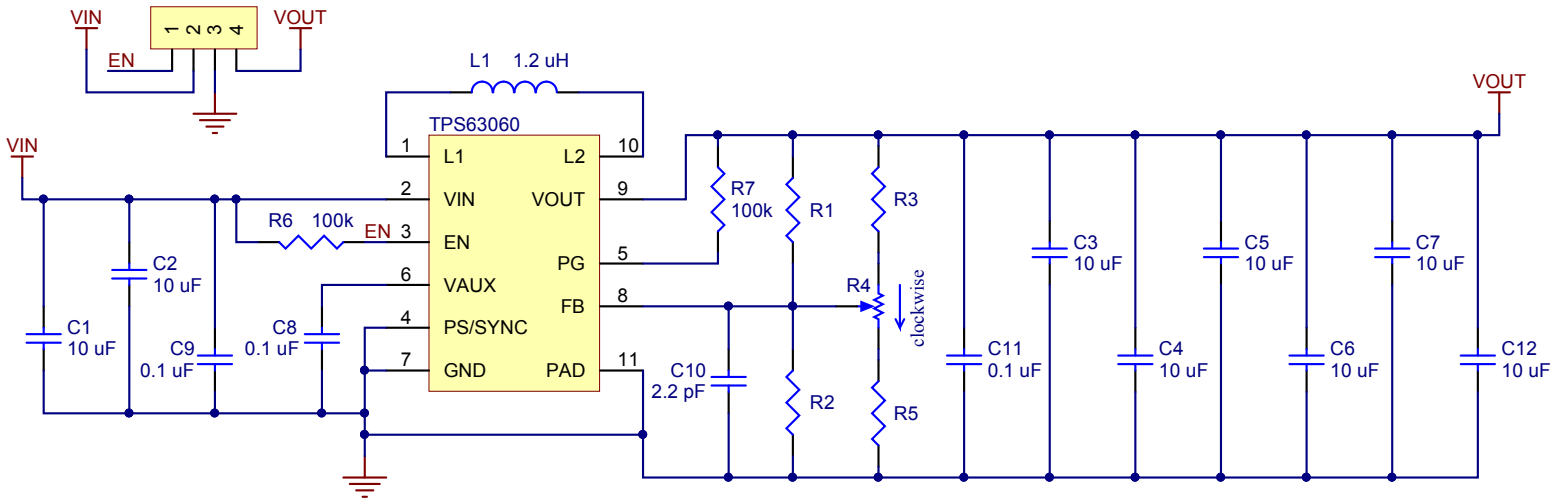

Variant	R1	R2	R3	R4	R5
S7V8A	562 kΩ	NP	562 kΩ	100 kΩ	12.4 kΩ
S7V8F3	360 kΩ	64.9 kΩ	NP	NP	NP
S7V8F5	590 kΩ	64.9 kΩ	NP	NP	NP