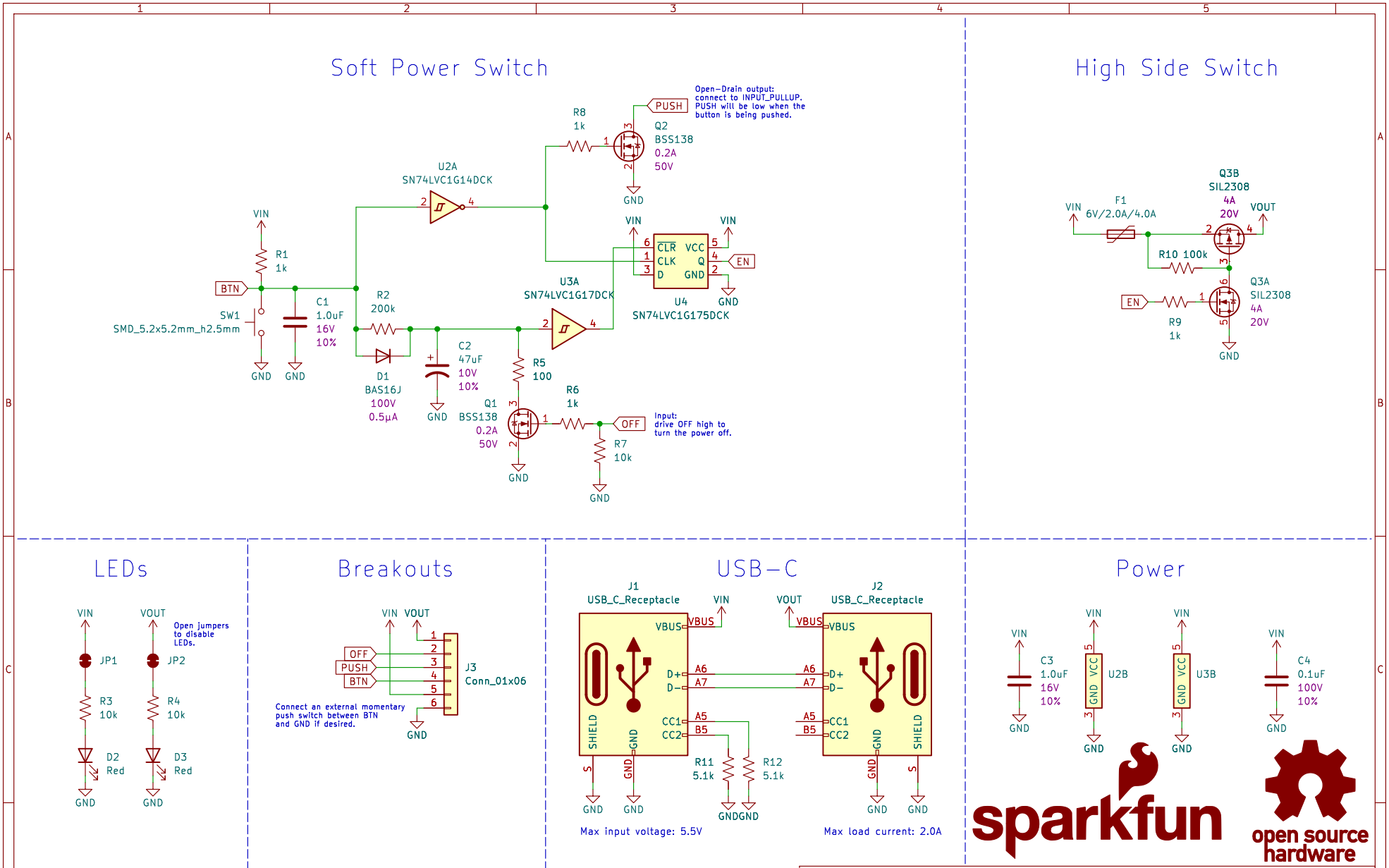
Soft Power Switch
High Side Switch
LEDs
Breakouts
USB-C
Power
Open-Drain output: connect to INPUT_PULLUP. PUSH will be low when the button is being pushed.
Input: drive OFF high to turn the power off.
Open jumpers to disable LEDs.
Connect an external momentary push switch between BTN and GND if desired.
Max input voltage: 5.5V
Max load current: 2.0A
Q2 BSS138 0.2A 50V
U2A SN74LVC1G14DCK
U3A SN74LVC1G17DCK
U4 SN74LVC1G175DCK
SW1 SMD_5.2x5.2mm_h2.5mm
D1 BAS16J 100V 0.5µA
Q1 BSS138 0.2A 50V
F1 6V/2.0A/4.0A
Q3B SIL2308 4A 20V
Q3A SIL2308 4A 20V
J1 USB_C_Receptacle
J2 USB_C_Receptacle
J3 Conn_01x06
C1 1.0uF 16V 10%
C2 47uF 10V 10%
C3 1.0uF 16V 10%
C4 0.1uF 100V 10%
R1 1k
R2 200k
R3 10k
R4 10k
R5 100
R6 1k
R7 10k
R8 1k
R9 1k
R10 100k
R11 5.1k
R12 5.1k
JP1
JP2
D2 Red
D3 Red
Based on:
https://www.ti.com/lit/pdf/scea048
Designed by: Paul Clark
Sheet: /
File: Soft_Power_Switch_USB-C.kicad_sch
Title: SparkFun Soft Power Switch Mk2 USB-C
Size: USLetter
Date: 2024-09-30
Rev: v10
KiCad E.D.A. 8.0.4
Id: 1/1