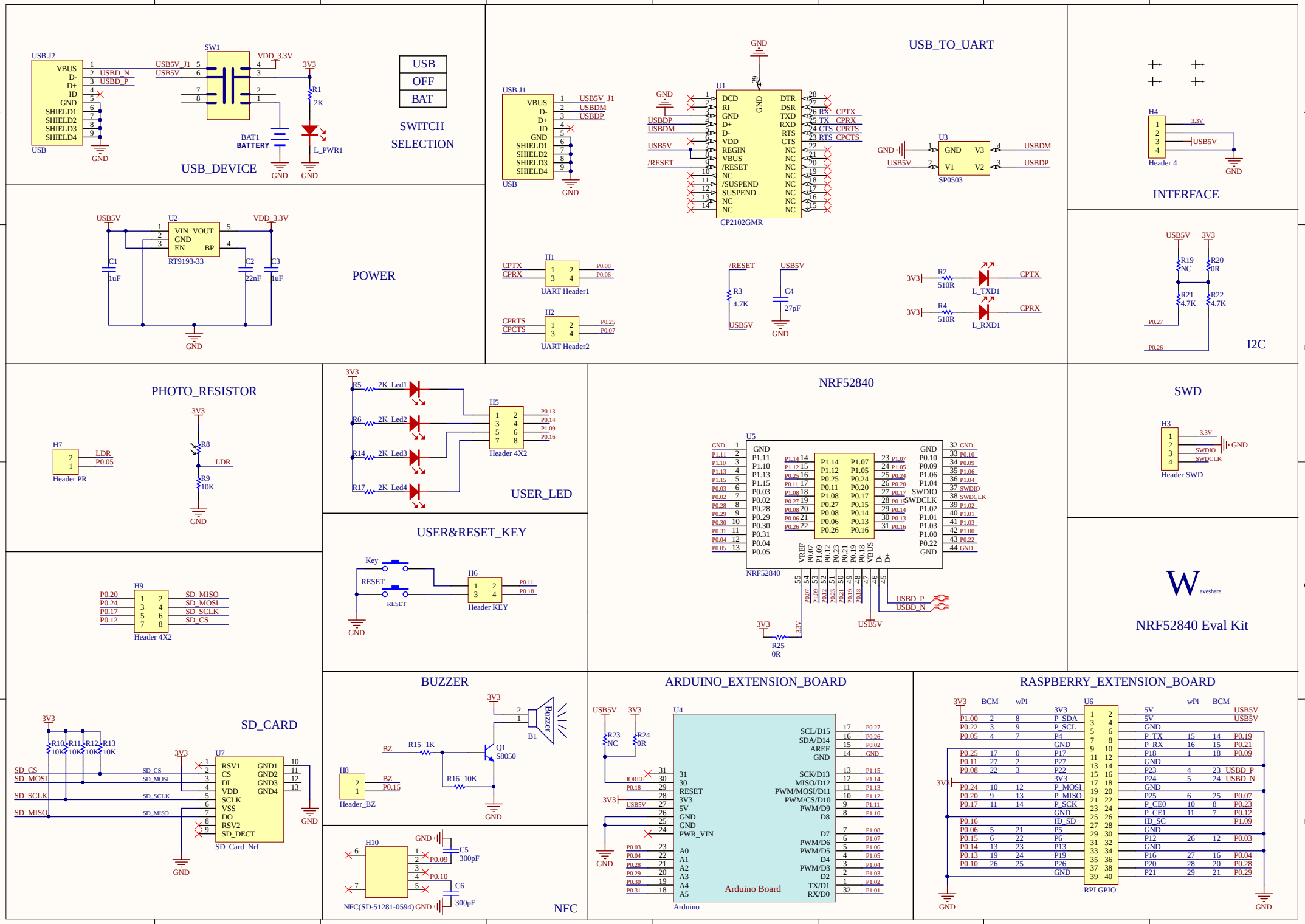
USB_DEVICE
USB.J2
SW1
VDD_3.3V
3V3
USB5V_J1
USB5V
USBD_N
USBD_P
R1
2K
BAT1
BATTERY
L_PWR1
GND
USB
SWITCH
SELECTION
USB
OFF
BAT
USB_TO_UART
USB.J1
VBUS
D-
D+
ID
GND
SHIELD1
SHIELD2
SHIELD3
SHIELD4
USB5V_J1
USBDM
USBDP
U1
DCD
RI
GND
D+
D-
VDD
REGIN
VBUS
/RESET
NC
/SUSPEND
SUSPEND
DTR
DSR
RX
TXD
RXD
TX
RTS
CTS
CPTX
CPRX
CPRTS
CPCTS
CP2102GMR
U3
SP0503
INTERFACE
H4
Header 4
3.3V
POWER
U2
VIN
VOUT
EN
BP
RT9193-33
C1
1uF
C2
22nF
C3
1uF
H1
UART Header1
H2
UART Header2
P0.08
P0.06
P0.25
P0.07
R3
4.7K
C4
27pF
R2
510R
R4
510R
L_TXD1
L_RXD1
I2C
R19
NC
R20
0R
R21
4.7K
R22
4.7K
P0.27
P0.26
PHOTO_RESISTOR
H7
Header PR
LDR
P0.05
R8
R9
10K
USER_LED
R5
R6
R14
R17
2K
Led1
Led2
Led3
Led4
H5
Header 4X2
P0.13
P0.14
P1.09
P0.16
NRF52840
U5
NRF52840
SWDIO
SWDCLK
USBD_P
USBD_N
R25
0R
SWD
H3
Header SWD
USER&RESET_KEY
Key
RESET
H6
Header KEY
P0.11
P0.18
H9
Header 4X2
SD_MISO
SD_MOSI
SD_SCLK
SD_CS
NRF52840 Eval Kit
SD_CARD
R10
R11
R12
R13
10K
U7
RSV1
CS
DI
VDD
SCLK
VSS
DO
RSV2
SD_DECT
GND1
GND2
GND3
GND4
SD_Card_Nrf
BUZZER
BZ
R15 1K
R16 10K
Q1
S8050
B1
H8
Header_BZ
P0.15
NFC
H10
NFC(SD-51281-0594)
C5
300pF
C6
300pF
P0.09
P0.10
ARDUINO_EXTENSION_BOARD
U4
R23
NC
R24
0R
IOREF
RESET
PWR_VIN
A0
A1
A2
A3
A4
A5
SCL/D15
SDA/D14
AREF
SCK/D13
MISO/D12
PWM/MOSI/D11
PWM/CS/D10
PWM/D9
D8
D7
PWM/D6
PWM/D5
D4
PWM/D3
D2
TX/D1
RX/D0
Arduino Board
Arduino
RASPBERRY_EXTENSION_BOARD
BCM
wPi
U6
RPI GPIO
P_SDA
P_SCL
P4
P17
P27
P22
P_MOSI
P_MISO
P_SCK
ID_SD
P5
P6
P13
P19
P26
P_TX
P_RX
P18
P23
P24
P25
P_CE0
P_CE1
ID_SC
P12
P16
P20
P21
USBD_P
USBD_N
P0.19
P0.21
P0.09
P0.12
P0.07
P0.03
P0.04
P0.28
P0.29
P0.30
P0.31
P1.01
P1.02
P1.03
P1.04
P1.05
P1.06
P1.07
P1.08
P1.09
P1.10
P1.11
P1.12
P1.13
P1.14
P1.15
P1.00
P0.22
P0.05
P0.24
P0.20
P0.17
P0.16
P0.06
P0.15
P0.14
P0.13
P0.10